Low Frequency
Pneumatic Isolation Solutions

FABREEKA®
VIBRATION & SHOCK CONTROL

Low Frequency
Pneumatic Isolation Solutions

Global Thinking

- **Fabreeka® International, Inc.**
  Corporate Headquarters - Stoughton, MA, USA
- **ACE-Fabreeka UK**
- **Fabreeka GmbH Deutschland**
- **Fabreeka Taiwan**

Fabreeka® International has been a leader in the field of shock and vibration control since 1936. Our company provides vibration isolation and shock control solutions for industries worldwide.

Sound engineering principles and tested performance support all of our isolation systems. *Fabreeka® is more than a manufacturer of isolators.* We engineer solutions for your vibration and shock problems.

- Service
- Solutions
- Products

Contact us at any one of our worldwide facilities, listed on the back page, for assistance.

4 **Introduction**
The purpose of isolation is to control unwanted vibration so its adverse effects are kept within acceptable limits.

5 **Technical Discussion - Pneumatic Isolators**
The basics of pneumatic isolator design - natural frequency, damping and transmissibility.

9 **Design Services**
Our engineering team can provide vibration measurement & analysis, as well as dynamic, structural and finite element (FE) analysis as part of the total isolation solution.

Products

11 **Precision-Aire™ Leveling Isolators (PAL)**
Low frequency, self-leveling, pneumatic isolators that support loads up to 120,000 lbs each.

17 **Delta-K™ Pneumatic Isolation System Module**
Provides an increase in machine throughput by allowing fast measuring/positioning to occur at the machine's designed accuracy.

18 **Precision-Aire™ Digital Electronic Leveling**
The PA-DEL controller is used where higher leveling accuracy and an increase in isolator settling time is required.

19 **RDS (Rapid Deflate System) and *STATUS***
The RDS module allows for rapid system deflating for part loading/unloading. *STATUS* is position feedback indicating the height of a floating system.

20 **Precision-Aire™ Pneumatic Leveling Mounts (PLM)**
Rugged, low frequency, pneumatic/elastomeric vibration and shock isolators.

Applications

22 ***Precision Machine Tools***
Diamond turning and high accuracy machine tools.

23 ***Metrology/Inspection***
Coordinate measuring, wafer inspection and sensitive inspection equipment.

24 ***Automotive Testing***
Applications including engine test rigs, road simulators, shakers.

25 ***Aerospace Testing***
Vacuum compatible isolators and vacuum chamber isolation.

26 ***Aircraft Ground Vibration Testing***
Soft support systems for aircraft ground vibration testing.

27 ***MRI/NMR***
Vibration isolation solutions for MRI and NMR equipment.

Introduction

Low frequency vibration and shock can affect the accuracy, repeatability and throughput of precision measuring, positioning and manufacturing equipment. Since finer resolution of a finished product is required, manufacturing, metrology, engineering and research facilities require increased dynamic stability. Low frequency and ultra-low frequency vibration isolation is a method of improving the current vibration environment to achieve a significant increase in precision manufacturing accuracy or to offer a solution which approaches the "vibration free" domain.

Mechanical vibration and shock exist in all environments. Depending on how severe the disturbance and how sensitive the equipment, the problems caused by the vibration or shock can be negligible or destructive.

A vibration environment consisting of low level seismic disturbances, present everywhere on earth, may be imperceptible to humans but can cause operating problems for sensitive equipment. Add to this everyday vibration created by vehicles, foot traffic, fork lifts, machinery and HVAC systems, and an even greater range of equipment is affected.

Vibrations originating from machines or other sources (acoustically) are transmitted to a support structure such as a facility floor, and can cause a detrimental environment and unwanted levels of vibration.

Some of the equipment and processes affected by vibration include precision machine tools, coordinate measuring machines, magnetic resonance imaging (MRI/NMR) equipment, laboratory and semiconductor processing equipment.

The purpose of vibration isolation is to control unwanted vibration so that its adverse effects are kept within acceptable limits. Isolators are designed to provide vibration and shock protection to these and other types of equipment.

If the equipment requiring isolation is the source of unwanted vibration (i.e. shock and vibration test equipment), the purpose of isolation is to reduce the vibration transmitted from the source to the support structure. (Fig 1)

Conversely, if the equipment requiring isolation is a recipient of unwanted vibration (i.e. electron microscope, coordinate measuring machines), the purpose of isolation is to reduce the vibration transmitted from the support structure to the recipient. (Fig 2)

An isolator is a resilient support that decouples an object from steady state or forced vibration. The primary advantage to pneumatic isolators is that they can be designed to have vertical and horizontal natural frequencies as low as 0.4 Hz to 5.0 Hz. Therefore, vibration isolation can be achieved at frequencies as low as 0.7 Hz.

Fig 1

A four-post road simulator test rig creates high amplitude vibration and shock at low frequencies to test vehicles for "squeak, rattle and roll" conditions. Pneumatic isolators reduce the vibration and shock transmitted to the environment.

Fig 2

Due to the accuracy of the machine's measurements, a coordinate measuring machine is sensitive to certain amplitudes of vibration and shock. Pneumatic isolators provide low frequency vibration isolation to reduce environmental vibration.

Technical Discussion

Natural Frequency

Pneumatic isolators consist of a volume of air (air chamber) that is sealed with a reinforced, flexible diaphragm. When pressurized, the isolator supports its payload using a piston, which is located on top of the diaphragm. (Fig 3)

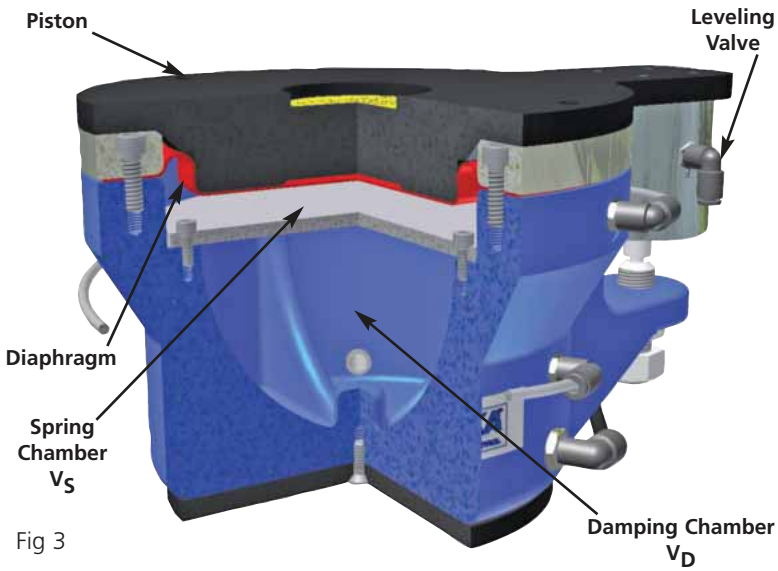

Fig 3

The effective area of the diaphragm and the pressure on the diaphragm define the load capacity of the isolator. The pressure in the isolator is controlled by a leveling valve that controls both the internal pressure and "float" height of the isolator.

The typical pneumatic isolator design incorporates dual air chambers, a spring chamber and a damping chamber. In the Fabreeka design, the damping chamber is separated from the spring chamber and connected by pneumatic tubing (see Damping). This design concept can take different shapes, since only the total or "effective" volume is critical to the natural frequency of the isolator (Eq 1). Note that the pressure (P) is proportional to the load (W), thus maintaining a constant natural frequency even when the load changes.

$$F_n = \frac{1}{2\pi}\left(\frac{nP(A_{eff})^2 g}{V\,W}\right)^{\frac{1}{2}} \qquad \text{Eq 1*}$$

Where: Fn = natural frequency (Hz)
g = gravity (in/sec^2)
n = rate of specific heat of gas at constant pressure and volume (1.4 for air)
W = weight of supported load (lbs)
A_{eff} = effective area of diaphragm (in^2)
V = air volume
P_{abs} = absolute pressure (psig)

*For operating pressures greater than 40 psi (3 bar).

The stiffness of pneumatic isolators comes primarily from the pressure and volume of a given air column. The stiffness of a pneumatic spring can be derived from the pressure-volume relationship of gas laws, assuming:

(a) Adiabatic compression
(b) Any change in volume is small relative to the initial volume

Yields:

$$K = \frac{nP(A_{eff})^2}{V} \qquad \text{Eq 2}$$

Where:
K = stiffness (lbs/in)
n = ratio of specific heat for the gas
(n = 1.0 for air at low frequencies less than 1 Hz.)
P_{abs} = absolute gas pressure of air column (psi)
A_{eff} = area of air column (in^2)

From this expression it can be seen that the response of a mass supported by an undamped air spring is determined by the volume of air.

Note that even when using a thin, flexible diaphragm, the elastomeric material will exhibit an added stiffness at very low pressures. This added stiffness affects the pneumatic contribution of the isolator. To reduce this stiffness contribution, operating pressures should be higher than 3 bar. Valve stiffness can also have an effect on the overall stiffness of a pneumatic isolator.

Damping

The purpose of damping in an isolator is to reduce or dissipate energy as rapidly as possible. Damping is also beneficial in reducing vibration amplitudes at resonance. Resonance occurs when the natural frequency of the isolator coincides with the frequency of the source vibration.

The ideal isolator would have as little damping as possible in its isolation region and as much as possible at the isolator's natural frequency to reduce amplification at resonance. Damping however can also lead to a loss of isolation efficiency. (Fig 5)

To provide vertical damping for a system, a damping chamber is connected to the spring chamber using pneumatic tubing. (Fig 4) An expression for the damping can be obtained by analyzing the rate of change of energy, which occurs when the air flows between chambers. This expression is a function of the tubing and the volume ratio between the spring and damping chambers.

Fig 4

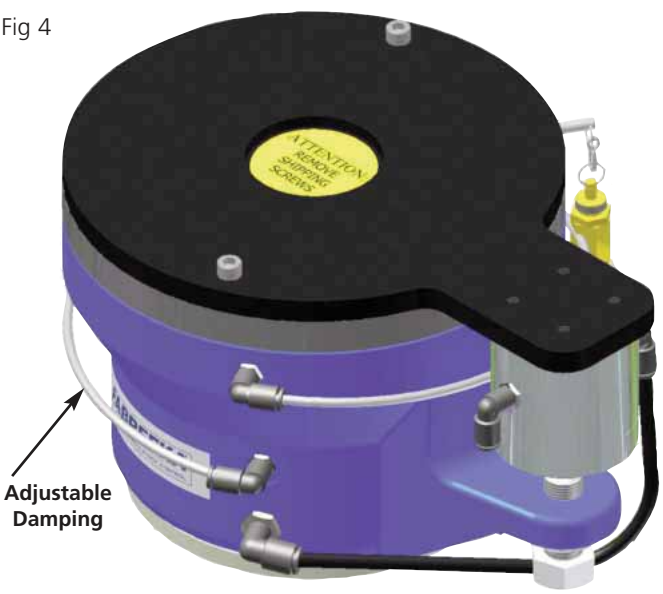

Damping is looked at carefully to give the best effective isolation that can be achieved. For air spring-mass systems, damping is essential to stop transient vibrations following a disturbance such as a stage or bridge moving and to limit the amplitude of forced vibration at the isolator's natural frequency. The length and diameter of the tubing are chosen for a given volume ratio to create laminar flow in the damper. This design concept allows for a wide range of damping values to be used depending on the application. Damping is optimum when the air flow in the tubing is laminar for both large and small disturbances.

Transmissibility

The natural frequency (dynamic stiffness) and damping properties of an isolator determine the isolator's transmissibility.

The ratio of vibration transmitted after isolation to the disturbing vibration is described as "transmissibility" and is expressed in its basic form in Equation 3, where F_d is the disturbing frequency of vibration and f_n is the natural frequency of the isolator.

$$T = \frac{1}{\left(\frac{F_d}{F_n}\right)^2 - 1} \qquad \text{Eq 3}$$

When considering damping, the equation is rewritten (Eq 4), where ξ represents the damping of the isolator.

$$T = \sqrt{\frac{1 + \left(2 \times \frac{F_d}{F_n} \times \zeta\right)^2}{\left[1 - \frac{(F_d)^2}{(F_n)^2}\right]^2 + \left(2 \times \frac{F_d}{F_n} \times \zeta\right)^2}} \qquad \text{Eq 4}$$

Maximum transmissibility of an isolator occurs at resonance when the ratio of the disturbing frequency to the natural frequency is equal to 1 ($F_d / F_n = 1$). At resonance the transmissibility is given by equation 5. Note that the magnitude of an isolator's amplification at resonance is a function of that isolator's damping.

$$T = \frac{1}{2\zeta} \qquad \text{Eq 5}$$

Fig 5 graphically shows the transmissibility of an isolator as a function of the frequency ratio. Several percentages of critical damping are displayed to show the effect of damping in the isolation region

and the amplification region, including the maximum amplification at resonance.

At frequencies greater than the square root of 2 (1.41) times the isolator's natural frequency, isolation (reduction in transmissibility) begins. Isolation improves as a function of the frequency ratio. The primary benefit of a pneumatic isolator is its low natural frequency and corresponding transmissibility at low frequencies. 80% to 90% reduction can be achieved below 10 Hz even with high damping.

Note that as damping is increased, the curve of transmissibility is flattened, so that in the region near to resonance (ratio = 1.0) the curve is reduced, but in the region where isolation is required, the curve is increased. The curves show that if there is a significant amount of damping in an isolator, its natural frequency has to be reduced to retain the desired degree of isolation at the frequency ratio of concern.

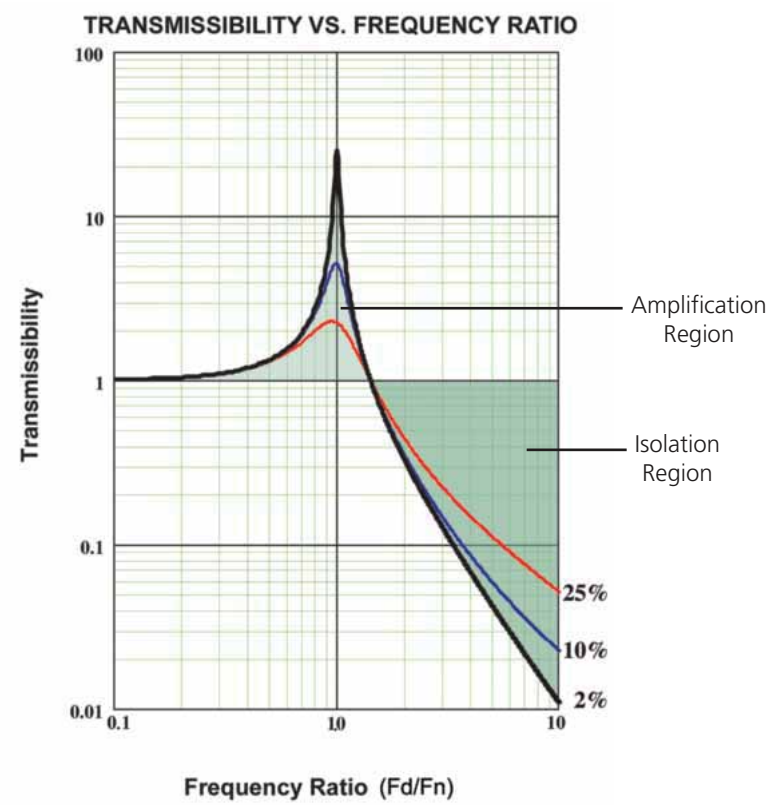

Fig 5

Theoretical (calculated) transmissibility curves do not indicate the vibration amplitude input of the disturbing frequencies (F_d). All isolators, including pneumatic isolators, can exhibit different dynamic natural frequencies as a function of amplitude input. At low vibration amplitudes, isolators can behave "stiffer" therefore having a slightly higher natural frequency. The behavior of isolators closely follows their theoretical transmissibility curves for larger vibration inputs.

Measured transmissibility curves should indicate the input amplitude of the vibration used during the measurement.

Application

Before a pneumatic isolation system is selected by analysis or test, the payload and its support base should also be evaluated dynamically for proper implementation. Poor structural stiffness can compromise the isolation efficiency of a system. The support base or structure of a payload can be considered a spring, since its stiffness can be calculated or determined by test. If the payload support structure is too "soft" and bends or deflects at low frequencies near the natural frequency of the isolation system, the isolation effectiveness of the system is reduced.

To ensure that an isolator will perform as intended, it is good design practice to have the support structure dynamic stiffness at least 10 - 20 times higher than the isolator, depending on the application. Every structure (frame, base, inertia mass) has mass and stiffness. Structures also have many frequencies at which they vibrate or resonate. These frequencies are called structural resonances and are a function of the shape, method of support and material of the structure.

Recall from a transmissibility curve that when using pneumatic isolators, it is possible to achieve 80-90% isolation at frequencies greater than 10 Hz. Therefore, if the support structure stiffness is at least ten times greater than the isolator natural frequency, any vibration inputs at a structural resonance will be significantly reduced. This is especially important when support structures are fabricated steel or aluminum. Since these metals have very little damping when excited at their structural natural frequencies, the amplification at resonance is large. (Fig 6)

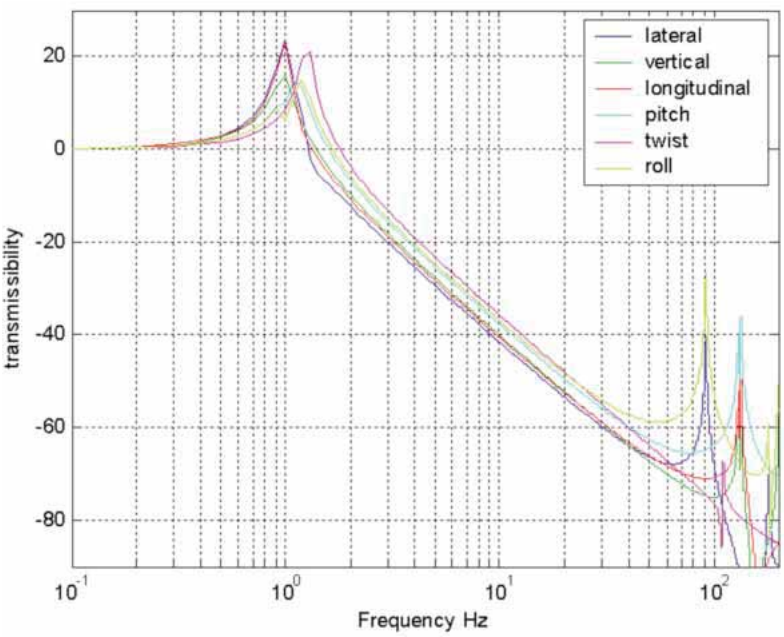

Fig 6

Transmissibility curve showing isolator translational and rotational frequencies, as well as support/machine base structural modes (resonances) above 80 Hz.

When structural resonances are objectionable, an effective solution could be to add damping to the structure, which reduces amplification at the structural resonance. Stiffening the structure may also help, since a structural resonance at a higher frequency may not affect the total system performance.

A second criteria for proper implementation of a pneumatic isolation system is the location/placement of the isolators. During design, the elastic plane of the isolators ideally should be in the same plane as the composite center of gravity (CG) of the payload and its support structure. In this manner, only translational modes (horizontal and vertical) of the isolator are observed. Since all isolators are free to move in all six axes (translational and rotational), rotational modes are also observed when the isolators are located below the center of gravity. (Fig 6)

When a payload vibrates purely in the vertical direction, a transmissibility curve that is very similar to the theoretical curve in Fig 5 is created. However, in addition to structural modes, rocking modes are created when a payload vibrates in the horizontal direction and the center of gravity is above the elastic plane of the isolators. Objectionable rocking modes can be addressed by changing the location of the isolators, so that the rotational modes are "coupled" with the translational modes.

If the center of gravity is too high above the isolator's elastic plane, instability can occur. Pneumatic isolator locations must satisfy the requirements for a stable system. This requirement is met by positioning the isolators within the limits of design guidelines for a stable system. (Fig 7)

An industry standard is to consider a line connecting the center line of the isolators. Using this line as a base, construct a triangle whose vertical height is 1/3 the length of the base. If the projection of the center of mass onto this plane lies within the triangle, the system will likely be stable and exhibit optimum isolation and damping characteristics.

Note: The relative position or distance of the isolators to each other in all axes of rotation is the primary design factor for a stable system. Another important factor for stability is the design of the isolators. The damping rate, effective volume and valve flow are all variables. Fabreeka® Engineers can provide proper recommendations for your application.

Fig 7

If the center of gravity is outside the triangle, the system is likely to have stability problems. If this is the case, it is sometimes possible to modify the isolators in the field with additive damping and/or a variable gain leveling valve to achieve stability. Additive damping however, will slightly increase the stiffness of the system and hence the vertical natural frequency of each isolator.

Design Services

Vibration Measurement & Analysis Services

Low frequency vibrations and large shock inputs can affect the accuracy, repeatability and throughput of precision machines and equipment. Most precision machine tool and measuring machine manufacturers have established allowable vibration specifications for their machines. Fabreeka® utilizes highly accurate instrumentation to quantify the amplitude and frequency of vibration to make proper vibration control recommendations.

Measurements with unique data analysis requirements are performed regularly by our Engineering staff for vibration isolation projects worldwide.

Fig 8 (above right) Vibration measurement software records amplitude and frequency data for analysis. Fabreeka® can provide vibration measurement services from any of our worldwide facilities.

Fig 9 (middle right) Comparing site vibration levels to the manufacturer's specifications will determine the isolation efficiency required at the frequencies where the measured vibration amplitudes exceed the machine allowable vibration criteria.

Fig 10 (lower right) Fabreeka® Engineers also conduct acceptance test measurements after isolation system installation. Acceptance test measurements provide the resultant vibration amplitudes after isolation is installed.

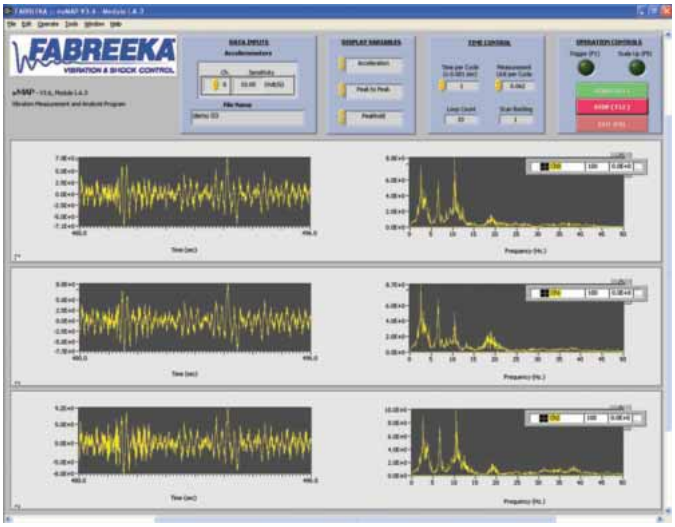

Fig 8

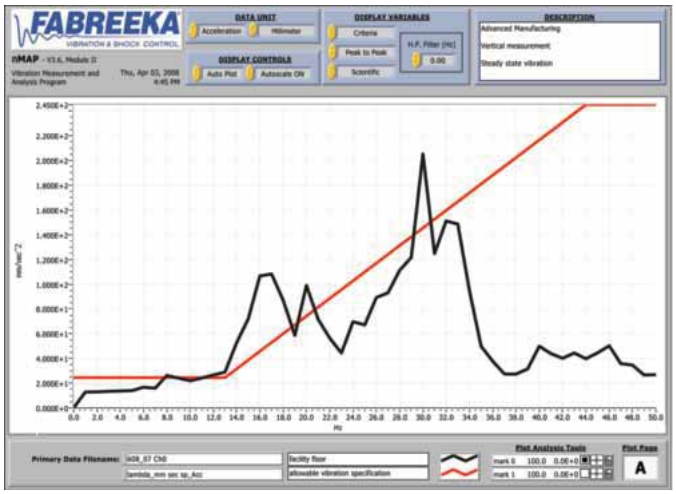

Fig 9

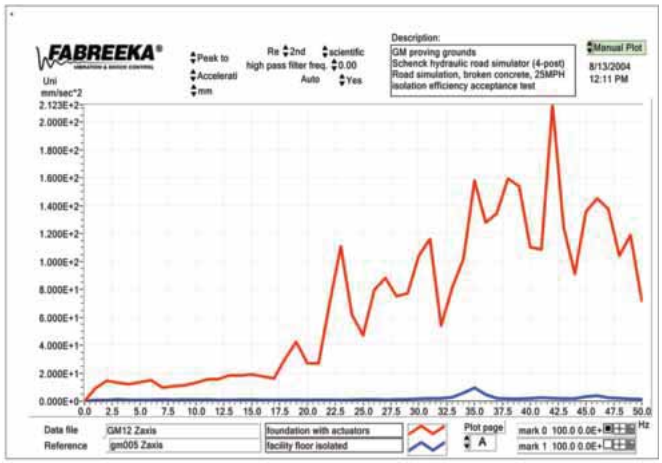

Fig 10

Dynamic and Finite Element Analysis

As mentioned in the technical discussion (page 7), the dynamic response of a support structure is part of the total system vibration solution.

Examining mode shapes in a vibrating structure is a valuable step in adjusting vibration amplitudes at critical points by varying the stiffness, mass and damping.

A finite element analysis will define and model the mode shapes and response frequencies of a structure, as well as the response of the isolation system to machine-induced inputs and/or environmental inputs.

Mode shapes (stiffness in each axis) identify the physical direction of each frequency mode and any deformations, such as bending or twisting. In general, a structure's modes indicate the relative degree of structural stiffness among various points on that structure. (Fig 11)

To be acceptable, the proposed design of a foundation or any support structure must provide a reliable structural configuration that also meets the static and dynamic criteria for the structure. Deflections caused by static loads or by dynamic forces/inputs should be within acceptable limits. This design approach requires modeling so that the real structure behavior is predetermined and errors are minimized.

The calculations for the stiffness of a support structure yield the static and dynamic behavior and stress concentration points that occur. Stresses are related to the geometry of the structure and the distribution of loads and forces acting upon it. A stress analysis will indicate the magnitude of stress imposed by static and dynamic loading. (Fig 12)

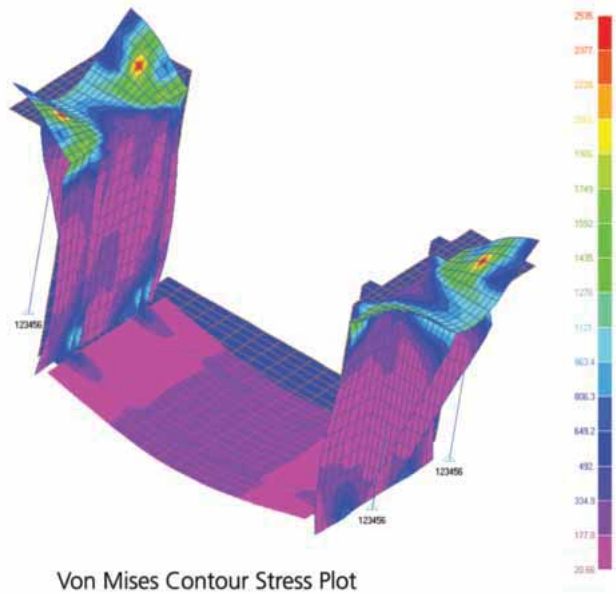

Fig 12
Stress analysis of a steel support frame for an electron microscope. The frame will also be analyzed dynamically for structural modes (resonances).

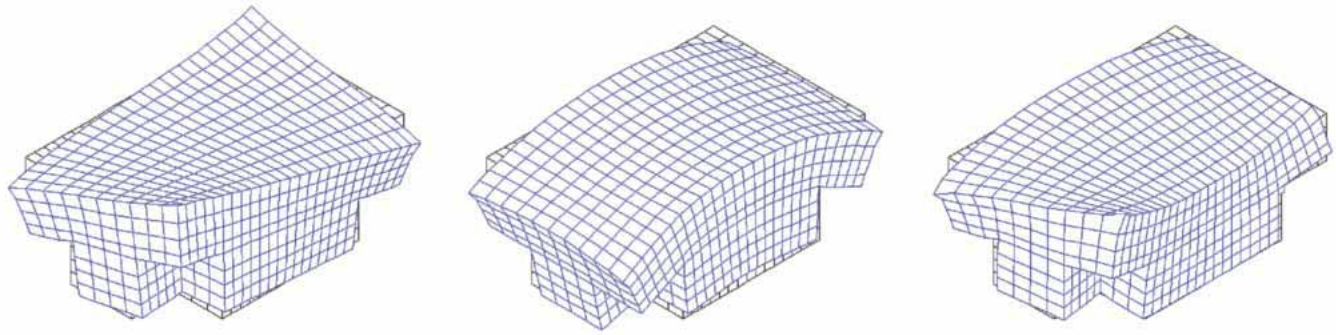

Mode 7: 69.58533 Hz. Mode 8: 73.43653 Hz. Mode 9: 99.11916 Hz.

Fig 11
First three structural modes of a concrete support foundation for an MRI unit.

Products

Precision-Aire™ Leveling Isolators (PAL)

PAL-type pneumatic isolators provide superior low frequency isolation for metrology instruments, electron microscopes, MRI units, coordinate measuring machines and precision manufacturing equipment.

Fabreeka's® Precision-Aire™ Leveling (PAL) model pneumatic vibration isolation systems use servo controlled air springs. These isolators are ideally suited for conditions where height control and vibration control must co-exist. Fabreeka PAL isolators meet the critical needs of metrology instruments, electron microscopes, inspection stations and precision manufacturing equipment.

PAL Isolators Description

The *standard* Fabreeka® PAL isolators have a natural frequency as low as 1.7 Hz, however, lower natural frequencies (0.5 Hz) can be obtained from custom designed isolators.

A complete Fabreeka® PAL system consists of a minimum of three master isolators for 3-point determinate leveling. Each isolator incorporates a leveling valve which is the load sensing and height controlling element. Any number of support isolators may be added to support the total weight of the equipment.

Systems are supplied with a control panel, automatic height control valves, tubing and all other pneumatic accessories necessary for complete system installation.

PAL isolators integrated into a coordinate measuring machine support frame.

PAL Isolator Performance

PAL isolators react quickly to changes in the supported load and to center of gravity shifts by automatically releveling to a preset position.

A pneumatic isolation system's performance is a compromise between natural frequency (isolation), valve leveling accuracy and settling time.

Settling time can be defined as the time it takes for an isolation system's motion to return to a predetermined reference with respect to a defined input disturbance. The disturbance can be an environmental input or machine induced, such as a gantry or stage movement.

Settling time is minimal with optimum damping and corresponding valve flow. Long settling times using pneumatic isolators are unacceptable because precision measuring and positioning machines can suffer repeatability errors and throughput losses.

Fabreeka offers many leveling valve options depending on the application. Valve flow rate, stiffness and accuracy characteristics are key variables in the design of an acceptable solution. Leveling accuracies of +/- 0.006" (0.15 mm) or +/- 0.001" (0.025 mm) are available. The flow rate and stiffness of a valve are chosen based on the isolator design and damping.

Isolation Characteristics/Specifications

	(-6)	(-12)
Natural Frequency		
Vertical	2.5 - 2.7 Hz	1.5 - 1.7 Hz
Horizontal	2.0 - 4.5 Hz	2.0 - 4.5 Hz
Damping		
Vertical (Adjustable)	6% - 20%	6% - 20%
Horizontal	5% - 6%	5% - 6%

Isolator Dimensions*

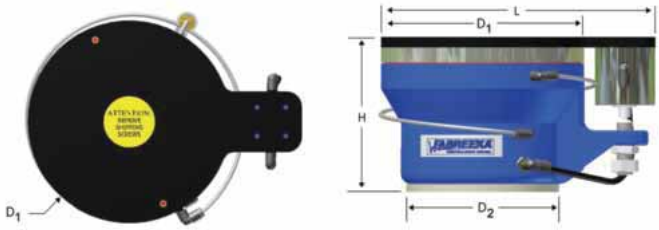

*Verify actual dimensions with Fabreeka®. Dimensions subject to change.

			H	H		Max Lifting Capacity[1]	
Type	D1	D2	Deflated	Max. Lift	L	lbs	Kg
PAL 18-6	6.50 in 165 mm	6.00 in 152 mm	6.00 in 153 mm	6.25 in 160 mm	9.21 in 234 mm	1,800	800
PAL 21-6	7.87 in 200 mm	5.90 in 150 mm	6.00 in 153 mm	6.40 in 163 mm	10.60 in 270 mm	2,100	950
PAL 21-12	7.87 in 200 mm	7.87 in 200 mm	12.00 in 305 mm	12.40 in 315 mm	10.60 in 270 mm	2,100	950
PAL 36-6	8.65 in 220 mm	7.50 in 190 mm	6.00 in 153 mm	6.40 in 163 mm	11.40 in 290 mm	3,600	1,630
PAL 55-6	10.25 in 260 mm	9.00 in 230 mm	6.00 in 153 mm	6.40 in 163 mm	13.00 in 330 mm	5,500	2,500
PAL 55-12	10.25 in 260 mm	10.25 in 260 mm	12.00 in 305 mm	12.40 in 315 mm	13.00 in 330 mm	5,500	2,500
PAL 75-6	11.80 in 300 mm	10.45 in 265 mm	6.00 in 153 mm	6.40 in 163 mm	14.55 in 370 mm	7,500	3,400
PAL 133-6	15.00 in 380 mm	13.78 in 350 mm	6.00 in 153 mm	6.40 in 163 mm	17.70 in 450 mm	13,300	6,030
PAL 133-12	15.00 in 380 mm	15.00 in 380 mm	12.00 in 305 mm	12.40 in 315 mm	17.70 in 450 mm	13,300	6,030
PAL 255-6	20.87 in 530 mm	18.50 in 470 mm	6.00 in 153 mm	6.50 in 165 mm	23.60 in 600 mm	25,500	11,560
PAL 255-12	20.87 in 530 mm	18.10 in 460 mm	12.00 in 305 mm	12.50 in 317 mm	23.60 in 600 mm	25,500	11,560
PAL 416-8	25.20 in 640 mm	23.00 in 585mm	8.00 in 203 mm	8.45 in 215 mm	28.00 in 710 mm	41,600	18,870
PAL 1000-6	37.40 in 950 mm	35.80 in 910 mm	6.00 in 153 mm	7.00 in 178 mm	40.15 in 1020 mm	100,000	45,360
PAL 1000-18	35.98 in 914 mm	35.98 in 914 mm	17.70 in 450 mm	18.70 in 475 mm	39.00 in 990 mm	100,000	45,360

[1]At maximum working pressure of 100 psi (7 bar)

Isolation Characteristics/Specifications

Pendulum Isolators

Natural Frequency	(-15/-19)	(-36)	(-52/-60)
Vertical	1.3 - 1.5 Hz	0.9 - 1.0 Hz	0.7 - 0.9 Hz
Horizontal	1.3 - 1.5 Hz	0.6 - 0.7 Hz	0.4 - 0.5 Hz
Damping			
Vertical (Adj)	6% - 20%	6% - 20%	6% - 20%
Horizontal (Adj)	3% - 6%	3% - 6%	3% - 6%

Isolator Dimensions*

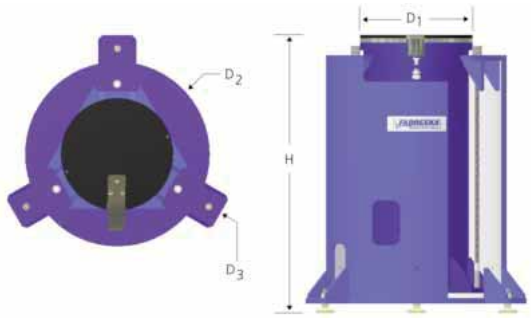

*Verify actual dimensions with Fabreeka®. Dimensions subject to change.

			H	H		Max Lifting Capacity[1]	
Type	D1	D2	Deflated	Max. Lift	D3	lbs	Kg
PAL 21-15P	7.87 in 200 mm	11.00 in 279 mm	15.00 in 381 mm	15.40 in 391 mm	N/A	2,100	950
PAL 55-15P	10.25 in 260 mm	18.50 in 470 mm	15.00 in 381 mm	15.40 in 391 mm	23.75 in 603 mm	5,500	2,500
PAL 55-52P	10.25 in 260 mm	18.50 in 470 mm	52.00 in 1321 mm	52.40 in 1331mm	23.75 in 603 mm	5,500	2,500
PAL 75-19P	11.63 in 295 mm	14.88 in 378 mm	19.00 in 483 mm	19.40 in 493 mm	N/A	7,500	3,400
PAL 133-36P	15.00 in 380 mm	24.50 in 622 mm	36.00 in 914 mm	36.40 in 924 mm	31.50 in 800 mm	13,300	6,030
PAL 133-60P	15.00 in 380 mm	24.50 in 622 mm	60.00 in 1524 mm	60.40 in 1534 mm	31.50 in 800 mm	13,300	6,030
PAL 255-36P	20.87 in 530 mm	30.50 in 775 mm	36.00 in 914 mm	36.45 in 926 mm	37.50 in 953 mm	25,500	11,560
PAL 255-60P	20.87 in 530 mm	30.50 in 775 mm	60.00 in 1524 mm	60.45 in 1536 mm	37.50 in 953 mm	25,500	11,560
PAL 416-36P	25.20 in 640 mm	36.50 in 927 mm	36.00 in 914 mm	36.45 in 926 mm	45.00 in 1143 mm	41,600	18,870
PAL 416-60P	25.20 in 640 mm	36.50 in 927 mm	60.00 in 1524 mm	60.45 in 1536 mm	45.00 in 1143 mm	41,600	18,870

[1]At maximum working pressure of 100 psi (7 bar)

Pendulum Isolators

Specially designed diaphragms may be used to lower the horizontal natural frequency of an isolator to approach 1.5 Hz. Alternatively, natural frequencies as low as 0.4 Hz can be achieved using pendulums. The pendulum natural frequency is given by Eq 6, where L is equal to the length of the pendulum.

$$F_n = \frac{1}{2\pi}\sqrt{\frac{g}{L}} \qquad \text{Eq 6}$$

At right, PAL 133-36P pneumatic isolators support a 80,000 lb reaction mass for a large NMR magnet. The vertical and horizontal natural frequencies are 1.0 Hz and 0.7 Hz.

Custom/OEM Isolators

Isolators for OEM applications or having custom requirements are available for easy integration into machine designs. For cleanroom applications, the exhaust air from the leveling valves is vented and the isolators are made using cleanroom compatible materials, cleaned and packaged. Isolators can also be made using non-magnetic materials.

			H	H		Max Lifting Capacity[1]	
Type	D1	D2	Deflated	Max. Lift	L	lbs	Kg
PAL 3-2.5	3.20 in 80 mm	3.20 in 80 mm	2.50 in 64 mm	2.75 in 70 mm	6.20 in 157 mm	260	115
PAL 4-3.5	6.00 in 152 mm	4.00 in 102 mm	3.50 in 89 mm	3.75 in 95 mm	8.00 in 203 mm	295	130
PAL 5.5-2.5	3.95 in 100 mm	3.95 in 100 mm	2.50 in 64 mm	2.75 in 70 mm	6.95 in 177 mm	480	210
PAL 9-4	5.10 in 130 mm	5.10 in 130 mm	3.65 in 94 mm	3.95 in 100 mm	8.15 in 207 mm	735	330
PAL 9-6	5.10 in 130 mm	5.10 in 130 mm	6.00 in 153 mm	6.25 in 159 mm	8.71 in 221 mm	735	330

[1]At maximum working pressure of 100 psi (7 bar)

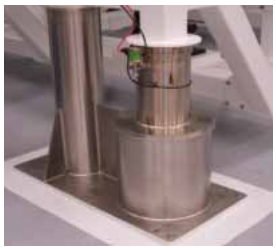

Class 100,000 cleanroom compatible isolator.

Leveling Valves

A wide range of leveling valves are available. Leveling valves have accuracies from +/- 0.006" (0.15 mm) to +/- 0.001" (0.025 mm)* with adjustable flow rates to accommodate application requirements. Valve stiffness, flow rate and accuracy are important variables to optimum isolator settling time and isolation efficiency.

*Lever arm will change accuracy; however will increase stroke.

Cradle Platforms and Machine Frames

Cradles and custom designed frames increase the stability of self-leveling pneumatic isolation systems by lowering the center of gravity.

An important criteria for proper implementation of pneumatic isolators is their location/placement under the equipment or machine being isolated. In the system design, the elastic plane of the isolators should be as close to the center of gravity of the payload and its support structure as possible.

Rocking modes are created when a payload vibrates in the horizontal direction and the center of gravity is above the elastic plane of the isolators. If the center of gravity is too high above the isolator's elastic plane, instability can occur. Pneumatic isolator locations must satisfy the requirements for a stable system. (Fig 7, page 8)

A cradle support frame is used to position the isolators closer to the center of gravity to reduce rocking. (Illustration, upper right) A cradle is also used when a machine's base cannot be modified to accept isolators and a rigid support frame is required.

The structural and dynamic design of the cradle is critical. (Fig 12, page 10) Stresses and deflections (bending) due to machine/equipment weight and the dynamic stiffness (structural resonances) are part of a successful solution using PAL or PLM pneumatic isolators.

Air Bag Isolators

Air bag type pneumatic isolators provide low frequency isolation for test rigs, large reaction masses and applications where large dynamic displacements and lift height are required.

Air bag type isolators can have vertical and horizontal natural frequencies from 1.2 to 4.0 Hz, depending on the floatation height and style of air bag (single, double or rolling convolution). The horizontal spring rate (stiffness) and air bag stability are also a function of the flotation height. Each type of air bag has an optimal flotation height for these reasons. Lower vertical natural frequencies can be obtained by adding additional air volume, such as an auxiliary tank.

One of the features of an air bag type isolator is that they provide a large stroke when inflated. Lift or float heights can be 2" - 3", depending on the style of convolution. Therefore, air bag isolators are able to be designed into applications where large dynamic displacements are a factor.

Air bags and diaphragm-type pneumatic isolators have very little damping (3% - 4%) unless a damping volume is connected to the isolator volume. Most designs will require 10% - 15% damping, depending on the application and the specifications for isolation and settling time.

A complete isolation system consists of a minimum of three master isolators for 3-point determinate leveling. Each isolator incorporates a leveling valve which is the load sensing and height controlling element. Any number of support isolators may be added to support the total weight of the equipment.

Systems are supplied with a control panel, automatic height control valves, tubing and all other pneumatic accessories necessary for complete system installation.

Air bag isolators provide a low natural frequency and large dynamic stroke where dynamic deflection is acceptable.

Single convolution air bag isolator with damping chamber and leveling valve supporting a reaction mass for electrodynamic shaker.

Double convolution air bags designed with additional air volume (auxiliary tanks), damping chambers and leveling valves. This isolation system supports a reaction mass with a bedplate for an engine/dynamometer test rig.

Delta ΔK™ Pneumatic Isolation System Module

Low frequency and large amplitude vibrations can affect the accuracy, repeatability and throughput of precision measuring machines. A pneumatic isolation system must provide isolation of environmental vibration and shock while minimizing relative motion between the workpiece and stylus/probe.

The Fabreeka® Delta K™ (ΔK™) controller works with low frequency, pneumatic isolation systems to provide *both* vibration isolation and an increase in repeatability and throughput by allowing the measuring machine to operate at its designed acceleration in harsh environments.

Working Principle

ΔK should be considered for any precision measurement machine that requires pneumatic isolation combined with rapid measurements. The vibration isolation system with ΔK controller is specifically designed to have a very high (stiff) spring rate when the machine is moving and a very low (soft) spring rate when the machine is measuring.

As the moving portion of the machine accelerates and decelerates to the point of measure, the stiff isolators with high damping prevent excess machine motion, reducing settling time prior to measurement. At the time of measuring, the ΔK controller receives a signal from the stylus/probe or machine controller and changes the stiffness and damping of the isolation system, converting it to a softer isolation system. In effect, the isolators undergo a *change in stiffness* (ΔK). (Fig 13)

Benefits of using a Fabreeka® ΔK™ controller:

- **Improvement in machine repeatability when machine requires isolators**
- **Rapid settling time**
- **Allows machine to operate at 100% acceleration without degradation to accuracy or repeatability**
- **ΔK can be used on existing pneumatic isolation system installations to improve machine/isolation performance**
- **ΔK controller works with both "touch trigger" and "strain gauge" type probes**

Delta K pneumatic isolation system module allows the Brown & Sharpe Global 7.10.7 CMM to operate at its designed speed and accuracy when supported on pneumatic isolators.

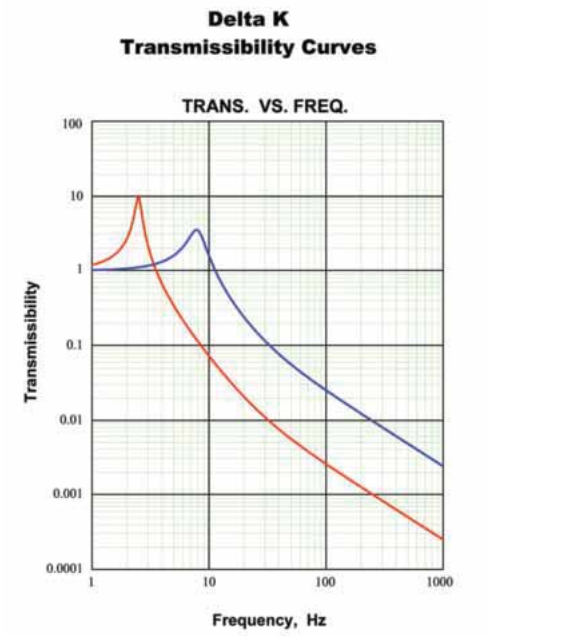

Fig 13

Precision-Aire™ Digital Electro-Pneumatic Level Control (PA-DEL®)

The PA-DEL digital electro-pneumatic leveling controller is for use with pneumatic isolation systems where a higher leveling accuracy and increase in isolator settling time is required.

The PA-DEL utilizes a digital controller, non-contact position sensors and high-flow electronic valves to enhance the performance of self-leveling pneumatic isolation systems. The electronic valves and position sensors allow the isolators to re-level three times faster than traditional mechanical leveling valves. The leveling accuracy of the PA-DEL controller is +/- 20 µm (microns), and the electronic valve flow rate can be adjusted for isolators of all sizes. The PA-DEL can be installed on existing pneumatic isolation systems where an increase in throughput is desired without sacrificing vibration isolation.

Operating Features

- Fully digital control circuit (controller, amplifier, valves) allows for feed forward or feedback signal processing
- Digital control algorithm allows for optimum control parameters with combined pulse width/pulse frequency modulation
- "Docking" or deflating to a preset position for part loading/unloading
- Programming of the controller and setting of the control panel parameters are done via serial port
- Connection of the PA-DEL controller to existing SPS machine controllers is possible for implementation into process automation
- Optionally equipped with remote control, so leveling of very large applications can be executed by one person
- Rack mountable via standard 19-inch mounting or standalone chassis

Position Control

- Non-contact position sensing, therefore no "vibration shortcut" possible between the isolated machine and the environment
- Measuring range of the sensors up to 45 mm
- Optional customized sensors may be used (voltage or current types)
- Accuracy of the position control can be adjusted depending on the application to +/- 20 µm

RDS Rapid Deflate System

RDS is ideal for applications where the isolated machine must be positioned at a reference datum prior to loading/unloading parts for measure.

The RDS components can be added to any pneumatic control panel to enable the operator to quickly lower or raise a machine supported by a pneumatic isolation system. This is especially important for large measuring machines requiring foundations and many isolators.

RDS deflates and inflates five to ten times faster than allowing the air pressure to exhaust back through the leveling valves. Only 10 psi (0.7 bar) of pressure is used, so that the isolators remain pressurized until re-inflated. Connection of the RDS to existing machine controllers is possible for implementation into process automation.

Equipped with **RDS** Rapid Deflate System

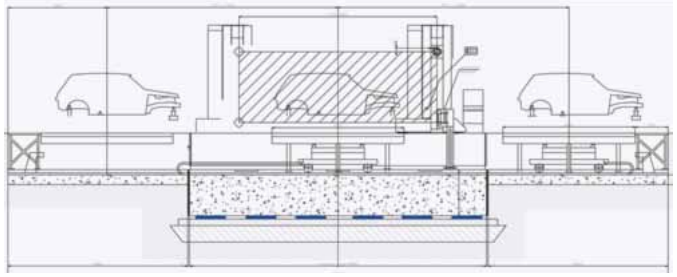

Existing systems can be easily upgraded in the field with RDS.

STATUS

The *STATUS* controller uses proximity sensors to monitor the floating or inflated position of a pneumatic isolation system. The sensors are installed on the three master isolators of any pneumatic isolation system.

If a master isolator or any isolator in its group deflates or is lowered out of an acceptable inflated position, the *STATUS* controller will indicate that there is a problem via a red LED. An audible alarm can be added as an option.

Often it is not possible to visually verify that isolators are in their proper inflated position, especially when installed under large foundations. Isolators can deflate or lower when leveling valves are subjected to moisture or oils in the air supply.

STATUS can be installed on any existing pneumatic isolation system or isolation table.

Precision-Aire™ Pneumatic Leveling Mounts (PLM)

PLM mounts provide low frequency vibration and shock control for surface plates, coordinate measuring machines, fans, air compressors, motor/generator sets, high-speed punch presses and more.

The Fabreeka PLM series pneumatic isolation mounts are low frequency vibration and shock isolators that provide both attenuation of disturbing vibration and equipment leveling.

For vibration control applications, the pneumatic (pressurized) portion of these mounts provides significant reduction of vibration amplitudes occurring at frequencies above 5 Hz, having a natural frequency as low as 3 Hz.

PLM isolation mounts will also continue to isolate with no pressure having a vertical natural frequency of approximately 10 Hz, isolating frequencies above 14 Hz.

The vertical to horizontal natural frequency ratio is approximately 1:1 with a high degree of horizontal stability.

For shock or impact applications, the outer elastomeric wall construction provides a high deflection shock mount. A low natural frequency (3 Hz) can be maintained by utilizing an external spacer to prevent a "bottom out" condition.

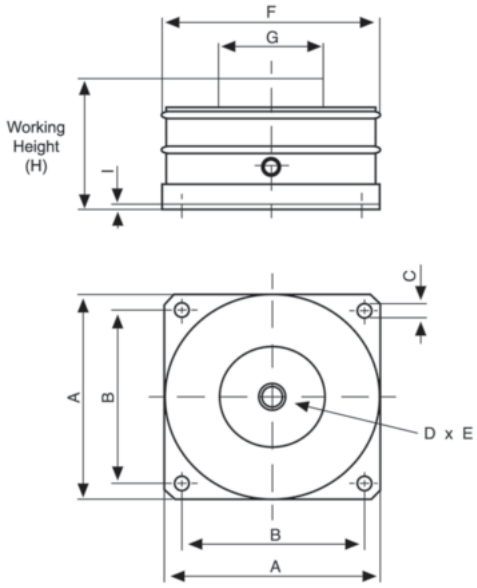

At left, an electro-dynamic shaker that produces a force range of 18,000 lbf (80 kN) to 50,000 lbf (222 kN). This test equipment is installed on PLM mounts to reduce the vibration created during testing.

PLM Mount Specifications

Model	Dimensions									Max Load
	A	B	C	D*	E	F	G	H	I	
PLM 1	3.00 in 76 mm	2.38 in 60.5 mm	0.28 in 6.9 mm	0.375-16 M10	0.47 in 12.0 mm	2.88 in 73 mm	1.00 in 25 mm	2.50 in 65 mm	0.125 in 3.2 mm	100 lbs 45 Kg
PLM 3	4.19 in 106 mm	3.50 in 89 mm	0.28 in 6.9 mm	0.500-13 M12	0.53 in 13.5 mm	4.14 in 105 mm	1.75 in 44 mm	2.45 in 65 mm	0.125 in 3.2 mm	300 lbs 136 Kg
PLM 6	5.12 in 130 mm	4.25 in 108 mm	0.29 in 7.4 mm	0.500-13 M12	0.53 in 13.5 mm	4.99 in 127 mm	2.13 in 54 mm	3.50 in 90 mm	0.125 in 3.2 mm	600 lbs 272 Kg
PLM 12	6.88 in 175 mm	6.00 in 152 mm	0.29 in 7.4 mm	0.500-13 M12	0.53 in 13.5 mm	6.74 in 171 mm	3.00 in 76 mm	3.50 in 90 mm	0.125 in 3.2 mm	1200 lbs 544.3 Kg
PLM 24	10.0 in 254 mm	8.50 in 216 mm	0.56 in 14.2 mm	0.625-11 M16	0.75 in 19.0 mm	9.66 in 245 mm	4.75 in 138 mm	3.50 in 90 mm	0.188 in 4.8 mm	2400 lbs 1089 Kg
PLM 48	13.50 in 343 mm	12.00 in 305 mm	0.56 in 14.2 mm	0.625-11 M16	0.75 in 19.0 mm	13.31 in 338 mm	7.50 in 190 mm	3.50 in 90 mm	0.188 in 4.8 mm	4800 lbs 2177 Kg
PLM 96	18.50 in 470 mm	16.00 in 406 mm	0.81 in 20.6 mm	1.000-14 M24	0.88 in 22.4 mm	18.44 in 468 mm	10.50 in 267 mm	3.50 in 90 mm	0.250 in 6.4 mm	9600 lbs 4354 Kg
PLM 192	24.00 in 610 mm	20.00 in 508 mm	0.81 in 20.6 mm	1.000-14 M24	0.88 in 22.4 mm	24.00 in 610 mm	15.75 in 400 mm	3.50 in 90 mm	0.250 in 6.4 mm	19200 lbs 8709 Kg

*Metric threads available upon request. Verify actual dimensions with Fabreeka.

Features

The Fabreeka® PLM design includes a molded threaded insert which allows the mounts to be inflated via either the standard tank valve or a pneumatic fitting. No custom adapters are necessary.

Supplied with a tank valve, the isolators are inflated and leveled manually using a hand pump or air chuck connected to an air supply. When supplied with a fitting, the mounts can be plumbed to a dedicated, regulated air supply making pressurizing and leveling easier. A regulator control panel (right) can be supplied to regulate the pressure and height of the interconnected mounts when leveling valves are not used.

The PLM mounts can also be supplied with automatic leveling valves for height control. Each master isolator incorporates a leveling valve, which is the load sensing and height controlling element. Any number of support isolators may be added to support the total weight of the equipment.

Systems can be supplied with a control panel, automatic height control valves, tubing and all other pneumatic accessories necessary for complete system installation.

PLM-3 mounts are integrated into the frame of Carl Zeiss EVO series SEM microscopes. The chamber and column are isolated to provide greater than 300,000 times magnification for X-ray geometry and electron imaging.

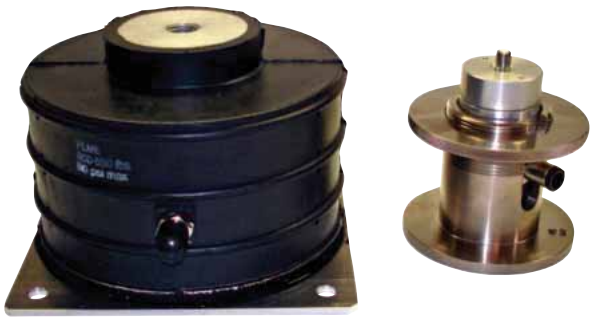

Low profile, leveling valves can be used with the PLM isolation mounts when automatic height control is required.

Applications

Precision Machine Tools

The degree of precision required for precision machine tools is ever-increasing. Equipment that cuts, turns, polishes and positions with nanotechnology can provide finishes and measurements within microns and even angstroms.

Ultra-precision equipment is used in many industries including semiconductor wafer processing, optics/lens manufacturing and non-standard material machining processes.

High accuracy positioning equipment including diamond turning lathes, X-Y stages and CD metrology machines typically utilize laser interferometry (position feedback) to position materials to be inspected with nanometer specifications. Additionally, equipment such as profilometers, form/contour and roughness/roundness machines are required to provide sub-micron measurements.

Machine capabilities include ultra-precision turning and microgrinding of materials such as optical glass, crystals, non-ferrous metals, polymers and ceramics. The surfaces of these materials are machined such that the results typically require little or no polishing with surfaces having sub-micron finishes. Products made via this process include CD's, contact lens tooling, optical lens components and mirrors for laser applications.

Fabreeka® provides precision equipment manufacturers and end users with low frequency vibration and shock isolation systems to maintain the designed accuracy of this equipment. Some applications require custom systems and structural analysis and design of the support structures and frames used in conjunction with the isolation system and integrated in the machine design.

(Photo courtesy of X-TEK)

(Photo courtesy of Precitech)

(Photo courtesy of Motion X)

(Photo courtesy of Precitech)

Metrology/Inspection Equipment

The measuring speed and accuracy of Coordinate Measuring Machines (CMM's) are improving every year. Newer CMM's are being designed and built to be shop floor "hardened" so they can function with repeatability right on the production floor. Vibration is one environmental factor which can compromise a CMM's accuracy and repeatability.

Ideally, if all components of a CMM, including the part to be measured, were to vibrate in unison at a specific frequency, amplitude, phase and orientation, no degradation in measured performance would result. To the CMM, this situation would represent the same condition as no vibration excitation whatsoever, since all parts of the CMM would be synchronized relative to one another. When components begin to move out-of-phase with each other or a structural resonance is excited, accuracy problems can occur.

Without compromising accuracy, CMM manufacturers provide their users with the maximum levels of vibration which their machines are capable of withstanding. This allowable vibration criteria is an important factor when considering if a machine requires vibration isolation or not.

Automotive Testing

Fabreeka® International has a leading role in providing vibration isolation systems and design techniques to meet the increasing demands of vehicle testing in simulated environments. Fabreeka® regularly provides isolation solutions for many applications including dynamometers, engine test rigs, road simulators and multi-axis shaker tables. Fabreeka's® technical expertise includes the structural design of support structures and reaction masses; static and dynamic analysis and acceptance testing.

Four-post actuator/road simulator

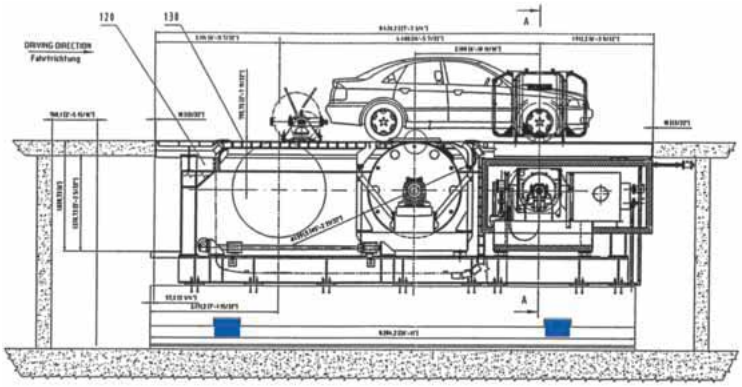

Rolling road test equipment on isolated support foundation

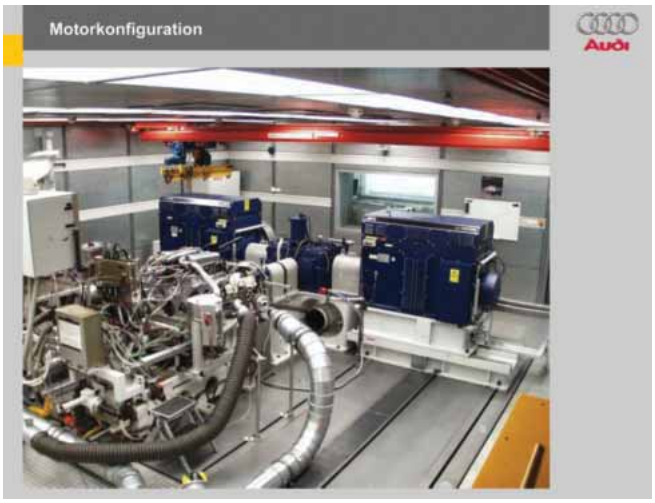

Engine/dynamometer testing on bedplate and support foundation.

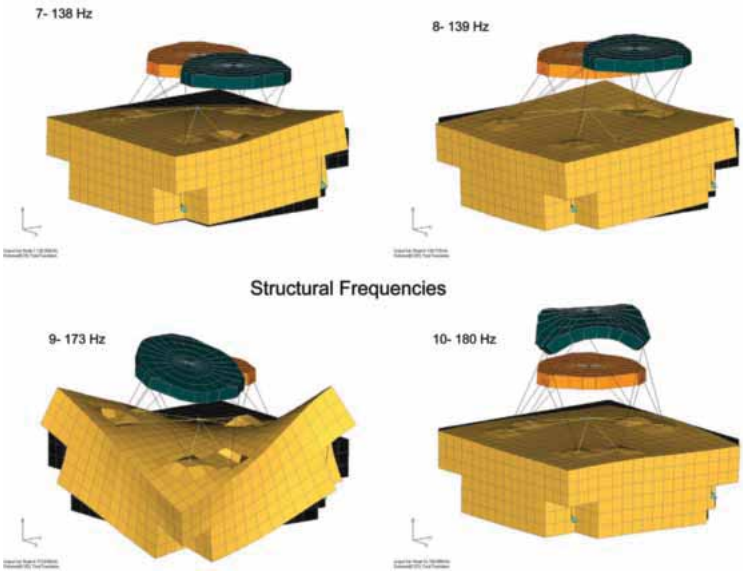

Multi-axis shaker table vibration/dynamic analysis

(Photo courtesy of Schenck)

Aerospace Testing

Fabreeka® provides low frequency vibration isolation systems for critical testing applications in the aerospace/defense industry, which require ultra-low frequency isolation. Applications often include nano-type measurements and can have error budgets within microns or tenths of arc seconds.

When performing testing of large spacecraft or hardware that will be launched into orbit, it is necessary to conduct testing in a space-simulated environment. To achieve this, a vacuum chamber or thermal vacuum chamber is used, which creates an environment to simulate the pressure and thermal effects of launch or space travel.

In cases where the size of the chamber, or the existing chamber, does not allow for "external" isolators, the test payload must be isolated inside the chamber. To achieve this, a vacuum compatible isolation system is used. When isolators are used inside a vacuum chamber, they must meet strict material specifications to limit outgassing and be constructed to meet particulate and molecular cleanliness requirements as well. Additionally, in thermo-vacuum applications, the isolators may be required to operate in temperature extremes where heater blankets are necessary to keep the isolators at an operable temperature.

(Photos courtesy of NASA)

Vacuum compatible, pneumatic isolator materials have a total mass loss (TML) of 0.85% and a collected volatile consumable material (CVCM) limit of 0.09%. Fabreeka's® design can operate in a 1×10^{-6} Torr environment and have a maximum leak rate of 1×10^{-7} cc/sec.

(Photo courtesy of B.F. Goodrich)

Soft Support Systems for Ground Vibration Testing

Fabreeka® has designed a number of "soft support systems" (SSS) using standard and custom pneumatic isolators for ground vibration testing (GVT) of aircraft. To obtain accurate results during GVT, the modal testing of the aircraft requires simulation of a "free-free" condition. To achieve this condition, Fabreeka® works with the structural and dynamics testing groups of aircraft manufacturers to design the required SSS for the GVT.

The pneumatic isolators support and decouple the aircraft from the ground when the aircraft is undergoing dynamic testing and modal/flutter analysis. The role of the system is especially important in identifying structural resonances and validating flutter models. The SSS can also include a jacking system to lift the aircraft off of its landing gear.

Embraer 190 aircraft (Photo courtesy of Embraer)

(Photo courtesy of EADS)

Isolators used for GVT have vertical and horizontal natural frequencies as low as 0.5 Hz.

F-35 joint strike fighter (Photo courtesy of Lockheed Martin)

MRI / NMR Spectrometer Equipment
(Magnetic Resonance Imaging / Nuclear Magnetic Resonance)

Fabreeka's® commitment to the science of vibration control is shown by the technical expertise, product knowledge and design solutions offered to our customers. Fabreeka® has provided vibration isolation solutions for all types of high resolution MRI, NMR and Cryostat equipment ranging in size from 300 MHz to 900 MHz.

All isolator hardware for NMR applications is made non-magnetic using stainless, aluminum or brass and is designed to interface with the existing magnet support brackets at the desired height.

Vibration isolation solutions include vibration measurements and the design of the support structures, including structural and dynamic analysis.

Above left, 800 MHz magnet supported on three PAL133-72P isolators (Photo courtesy of Magnex Scientific)

Above right, isolators for NMR magnets can be 42" to 72" in height and have vertical and horizontal natural frequencies as low as 0.8 Hz.

(Photo courtesy of the Cleveland Clinic)

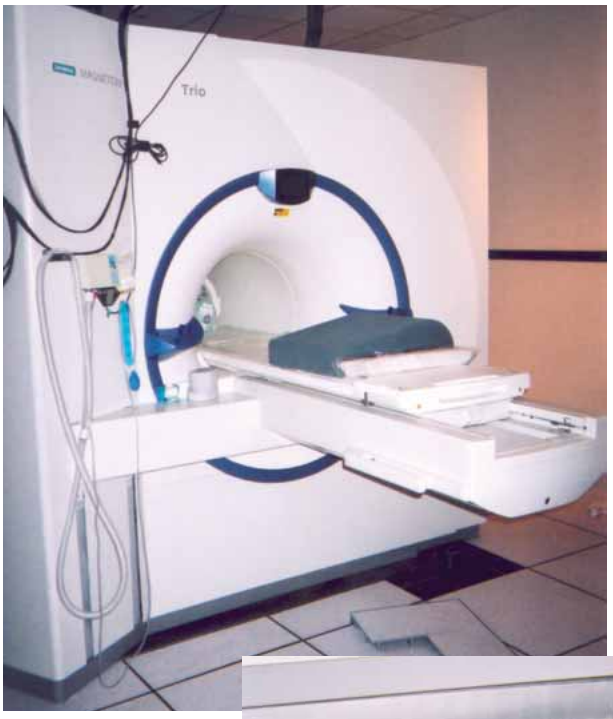

Varian horizontal cryostat (Photo courtesy of Astra-Zeneca)

MRI equipment is typically supported by a recessed platform or inertia mass, which is supported on pneumatic isolators below the examination room floor.

FABREEKA®
VIBRATION & SHOCK CONTROL

If you have any questions regarding how Fabreeka's products comply with various regulations, please refer to our website at www.fabreeka.com/product-compliance.

World Headquarters
Fabreeka International, Inc.
1023 Turnpike Street
Stoughton, MA 02072
Tel: (800) 322-7352
Tel: (781) 341-3655
Fax: (781) 341-3983
E-mail: info@fabreeka.com
www.fabreeka.com

Germany
Fabreeka GmbH Deutschland
Hessenring 13
D-64572 Büttelborn
Tel: 49 - (0)6152-9597-0
Fax: 49 - (0)6152-9597-40
E-mail: info@fabreeka.de
www.fabreeka.de

England
ACE Fabreeka UK
Unit 404 Easter Park
Haydock Lane
Haydock WA11 9TH
Tel: 44 - (0)1942 727440
Fax: 44 - (0)1942 717273
E-mail: info@ace-fabreeka.com
www.fabreeka.co.uk

Taiwan
Fabreeka International, Inc.
PO Box 1246
Tainan 70499
Taiwan
Tel: 886-935 273732
E-mail: info@fabreeka.tw
www.fabreeka.com.cn

©2009 Fabreeka International, Inc.
FAB 3000-310 0309:1216:0419

*Fabreeka is a registered trademark of Fabreeka International, Inc.