FABREEKA®
VIBRATION & SHOCK CONTROL

Fabreeka®
Piping Supports &
Structural Expansion Bearings

Fabreeka® is a leading manufacturer of products for reducing impact shock and vibration. Fabreeka® products have also been used successfully to reduce stresses and loads in supporting structures.

Fabreeka® has been a recognized leader in the expansion bearing and pipe slide field, incorporating the Fabreeka® pad to take up adverse rotation, misalignment conditions and the reduction of localized stresses and vibrations within structures.

To complement these expansion bearings, Fabreeka® provides a full line of bearing pad products for all types of building and construction applications.

SBX Structural Expansion Bearing Specification

- ***Polytetrafluorethylene (PTFE)*** self-lubricating surface bearing element shall be composed of 100 percent virgin (unfilled) polytetrafluorethylene polymer and bonded to a rigid confining substrate. The substrate shall limit the flow (elongation) of the confined PTFE to not more than 0.009" under load of 2,000 psi for 15 minutes at 78°F for a 2" x 3" test sample. The virgin (unfilled) PTFE shall have a thickness of not less than 1/32". The properties of the PTFE shall conform to the following requirements:

PTFE		
Requirement	Test Method	Value
Hardness at 78°F	ASTM D2240	50 - 65 Durometer D
Tensile Strength, psi	ASTM D4894	2800 (Min. Avg.)
Elongation %	ASTM D4894	200 (Min. Avg.)
Deformation Under Load % 78°F-2000 psi (1/2" x 1/2" x 1/32")	ASTM D621	4 (Max.)
Specific Gravity	ASTM D792	2.13 to 2.19

Epoxy		
Requirement	Test Method	Value
Flexural Modulus	ASTM D790	2×10^4
Safe Operating Temperature		-60° to 145°C
Linear Expansion Coefficient, in/in	ASTM D696	4.8×10^{-5}
Bond Strength, psi (Tensile Shear at 77°F)	ASTM D1002	1,000

- The ***Bearing Pad*** shall comply with the AASHTO Specifications 18.4.9.1 or current revision "Preformed Fabric Pads" and consist of multiple layers of 8 ounce cotton-polyester duck impregnated with high quality rubber, capable of withstanding loads of 10,000 psi perpendicular to the plane of lamination. Actual dimensions are determined by design criteria as noted on the structural drawings. The bearing pad shall meet the environmental requirements of MIL-E-5272 or current revision.

- The ***Stainless Sheet*** shall be 20 gauge (GA), meeting AISI Type 304 (ASTM A-240) specifications and have a mirror finish of less than 10 microinches R.M.S. (Root-Mean-Square) on the side in contact with the PTFE. The reverse side shall be prepared for bonding and/or spot welding, as required, to the carbon steel attachment plate. The stainless steel shall be 1/4" smaller than the carbon steel attachment plate all around, and these shall be bonded together with an epoxy adhesive meeting the requirements in the Epoxy Table (above).

- ***Tolerances -*** The bearing pad shall have a shore "A" hardness of 90 ± 5. The expansion bearing total thickness will be ± 1/16". The PTFE thickness shall be -0/ + .016.

Structural Expansion Bearings (SBX)

Fabreeka® Structural Expansion Bearings consist of an Upper Unit and a Lower Unit.

The **Upper Unit** includes a 10 GA carbon steel plate with a mirror finish stainless steel facing, epoxy-bonded and/or spot-welded, as required, to the bottom surface.

The **Lower Unit** is comprised of a Fabreeka® preformed fabric pad surfaced with PTFE. A rigid confining medium substrate bonds the PTFE to the pad, which is epoxy-bonded, as required, to a 10 GA carbon steel plate.

When the Upper and Lower Units are mated, the stainless steel facing slides on the PTFE surface with an extremely low coefficient of friction. The ***Coefficient of Friction*** between the self-lubricating bearing element (PTFE) and the stainless steel shall not be more than 0.06 at 800 psi compressive loading.

Structural Expansion Bearings (SBX)

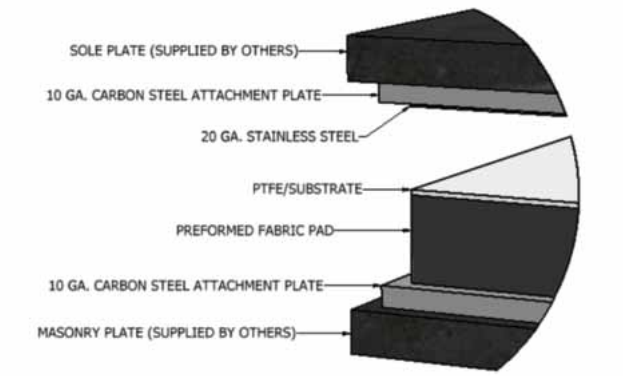

Guidelines for Applications

SBX Structural Expansion Bearings are used when construction tolerances, high load and rotation are prominent with beam spans being excessive. This bearing is the most resilient in our full line of expansion bearings.

Please follow the design criteria on pages 4, 5, 6 of this brochure.

Typical applications include:

- **Bridges**
- **Complex Structures[1]**

[1]Complex Structures include structures where vortex shedding and seismic conditions are prevalent.

Ordering Example for Expansion Bearings

Following is an example of standard order/part numbers:

FAB - UU - SBX - A x B - C[1] - H D[2]

- FAB: Fabreeka® Designation
- UU: UU = Upper Unit; LU = Lower Unit
- SBX: SBX = 20GA SS upper / 1/32" PTFE w/Fabreeka pad lower; STX = 20GA SS upper / 3/32" filled PTFE lower; TTX = 3/32" filled PTFE upper / 3/32" filled PTFE lower; GGX = Graphite upper / Graphite lower
- A x B: A x B = length (A) and width (B) of sliding surface
- C: C = Fabreeka-PTFE pad thickness; N = No Fabreeka pad
- H: H = Hole; S = Slot; N = No hole or slot
- D: D = Number of holes or slots

Notes:
-10GA carbon steel plates are 1/4" larger on all sides for SBX, STX and TTX bearings.
-All Standard carbon steel plates are 10GA with the exception of bearing type GGX.
[1]SBX-type Lower Unit only.
[2]Drawing with hole and slot locations must be provided with order.
Please refer to page 11 for information required to design a special bearing.

How to Design Fabreeka® SBX Structural Expansion Bearings

Lower Unit: The "Fabreeka®-PTFE" Lower Unit must be designed first. Size and thickness requirements for the Lower Unit are easily determined by referring to the **"Design Reference Chart"** and example on Page 5.

Upper Unit: The design of the Upper Unit is determined by (1) the dimensions of the Lower Unit, (2) expansion considerations and (3) the type of application, including the lateral restraint system.

Steel:

A 10 GA carbon steel attachment plate to which the Stainless Steel facing is epoxy bonded and/or spot-welded, as required.

Stainless Steel:

Stainless Steel facing is made 1/4" (6.4 mm) smaller all around than the 10 GA carbon steel attachment plate.

Steel Sole Plate:

When used with steel bridge beams: Sole plates (supplied by others) welded directly to the beam flange should be of proper structural integrity. If the attachment plate is welded to an existing sole plate, it can be as thin as 10 GA (3.4 mm) thick.

When used with concrete bridge beams: Sole plates (supplied by others) should be furnished with welded studs, so that they may be cast into the beam.

When used in buildings and other structures: Sole plates can be as thin as 1/4" (6.4 mm), depending on the predetermined design.

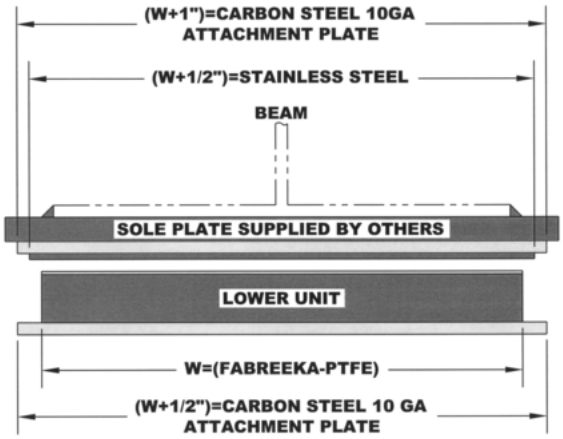

END ELEVATION

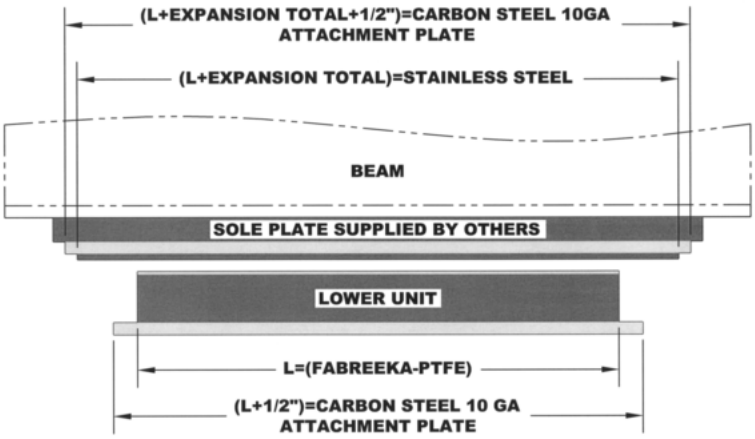

SIDE ELEVATION

Notes: 1.0 BEARINGS MUST BE SET LEVEL.

2.0 A masonry/sole plate (supplied by others) can be used beneath the lower unit if there is a need to distribute the bearing load to meet allowable pressures to the support. Their size and thickness are determined accordingly.

3.0 The design of shear plates, anchor bolts and other forms of restraints (supplied by others), when required, will depend on the horizontal forces to be resisted.

4.0 It is preferred that sizing of stainless steel slide surface is calculated at two times the expansion for proper positioning in all temperatures.

Design Reference Chart

(See derivation - Page 6)

Bearing Maximum Average Compressive Stress	Bearing Rotation Length / Bearing Thickness (L/T) Beam Rotation Across (L) - Radians																	
Radians	**0.020**	**0.019**	**0.018**	**0.017**	**0.016**	**0.015**	**0.014**	**0.013**	**0.012**	**0.011**	**0.010**	**0.009**	**0.008**	**0.007**	**0.006**	**0.005**	**0.004**	**0.003**
800 psi (5.5 N/mm^2)	**8.0**	**8.4**	**8.8**	**9.4**	**10.0**	**10.6**	**11.4**	**12.4**	**13.4**	**14.6**	**16.0**	**17.8**	**20.0**	**22.8**	**26.6**	**32.0**	**40.0**	**53.4**
1000 psi (7.0 N/mm^2)	6.0	6.3	6.7	7.0	7.5	7.9	8.6	9.1	10.0	10.9	11.9	13.3	14.9	17.0	19.8	23.8	29.8	39.7
1200 psi (8.5 N/mm^2)	**4.2**	**4.4**	**4.7**	**5.0**	**5.3**	**5.6**	**6.0**	**6.5**	**7.0**	**7.7**	**8.4**	**9.3**	**10.5**	**12.0**	**14.0**	**16.8**	**21.0**	**28.0**
1500 psi (10.0 N/mm^2)	1.8	1.9	2.1	2.2	2.3	2.5	2.6	2.8	3.1	3.4	3.7	4.1	4.6	5.3	6.2	7.4	9.3	12.3

*If your design average stress exceeds the 1500 psi listed above, please contact **Fabreeka's® Engineering Department** for assistance.*

Design Example

Assume a **Fabreeka® Structural Expansion Bearing** is required to support a steel bridge beam 28" (711 mm) wide with a provision for a 1" (25.4 mm) expansion and subject to the following conditions:

Maximum average compressive stress	=	800 psi (5.5 N/mm^2)
Maximum reaction (D.L. + L.L. + Impact)	=	180 Kips (800 kN)
Maximum rotation	=	0.015 radians

Lower Unit dimensions are determined as follows:

$$\text{Total } \textbf{Fabreeka® Pad} \text{ Area} = \frac{180{,}000 \text{ lbs (800 kN)}}{800 \text{ psi (5.5 N/mm}^2)} = 225 \text{ sq in (145,161 mm}^2)$$

making pad width (W) dimension equal to the beam width, then:

$$\text{Pad Rotation Length (L)} = \frac{225 \text{ sq in (145,161 mm}^2)}{28 \text{ in (711 mm)}} = 8 \text{ in (204 mm)}$$

Now we must use the "Design Reference Chart" shown above to determine the thickness. At the intersection of the 800 psi (5.5 N/mm^2) line and 0.015 radians column, we obtain a length/thickness ratio of 10.6. Therefore:

$$\text{Thickness (T)} = \frac{L}{10.6} = \frac{8 \text{ in (204 mm)}}{10.6\ (10.6)} \qquad T = 0.75 \text{ in (19 mm)}$$

The Fabreeka® Pad Lower Unit Dimensions are: W x L x T
28" x 8" x 3/4" thick (711 mm x 204 mm x 19 mm thick)

Upper Unit dimensions are determined by the dimensions of the Lower Unit, expansion considerations and the type of application (see sketch Page 3). Therefore:

The Upper Unit consists of a:

Carbon steel attachment plate:
29-1/2" x 10-1/2" x 10 GA thick
(749 mm x 267 mm x 3 mm thick)

Stainless Steel:
29" x 10" x 20 GA thick
(737 mm x 254 mm x 0.90 mm thick)

Note: The Upper Unit 10 GA carbon steel attachment plate is welded to the sole plate (supplied by others).

Feel free to contact the **Fabreeka® Engineering Department** any time at **1-800-322-7352** for design assistance.

Design Reference Chart Derivation

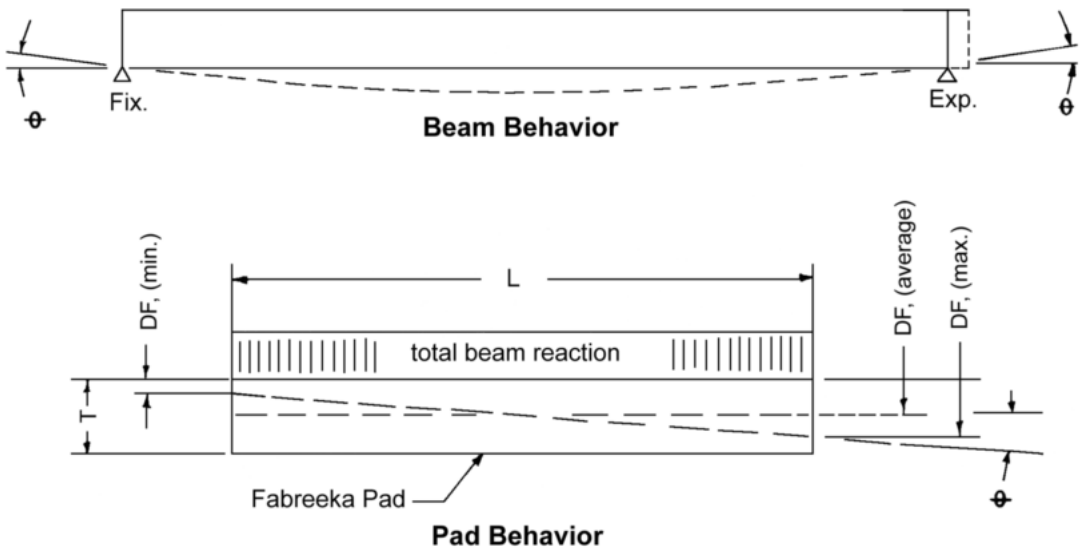

The L/T values shown in the "Design Reference Chart" were derived using the following procedure.

Pad stress distribution is a function of load, bearing angle, pad geometry and Fabreeka's® load-deflection characteristics as seen in the following formulas:

$$D_{F\,(max)} = D_{F\,(average)} + \frac{L}{2} \times \tan\theta \text{ (DEG)}$$

$$D_{F\,(min)} = D_{F\,(average)} - \frac{L}{2} \times \tan\theta \text{ (DEG)}$$

$$D_{F\,(max)} = D_{F\,(average)} + \frac{L}{2} \times {}^{*}\theta \text{ (radians)}$$

$$D_{F\,(min)} = D_{F\,(average)} - \frac{L}{2} \times {}^{*}\theta \text{ (radians)}$$

$$D_{F\,(max)} - D_{F\,(average)} = \frac{L}{2} \times \theta$$

and:

$$D_{F\,(max)} - D_{F\,(average)} = d \times T$$

Hence:

$$d \times T = \frac{L}{2} \times \theta$$

Therefore:

$$\boxed{\frac{L}{T} = \frac{2d}{\theta}} \quad \text{and} \quad \boxed{T = \frac{L}{2d/\theta}}$$

Where:

- L = Fabreeka® pad dimension across which rotation occurs. Parallel to longitudinal axis of beam.
- T = Fabreeka® pad thickness (inches).
- D_F = Fabreeka® Deflection = Unit Deflection (strain in inches/inch).
- d = Unit Deflection (strain/increment due to rotation).
- $^{*}\theta$ = Angle (θ) in radians because angles are less than 5°.

Average Coefficient of Friction

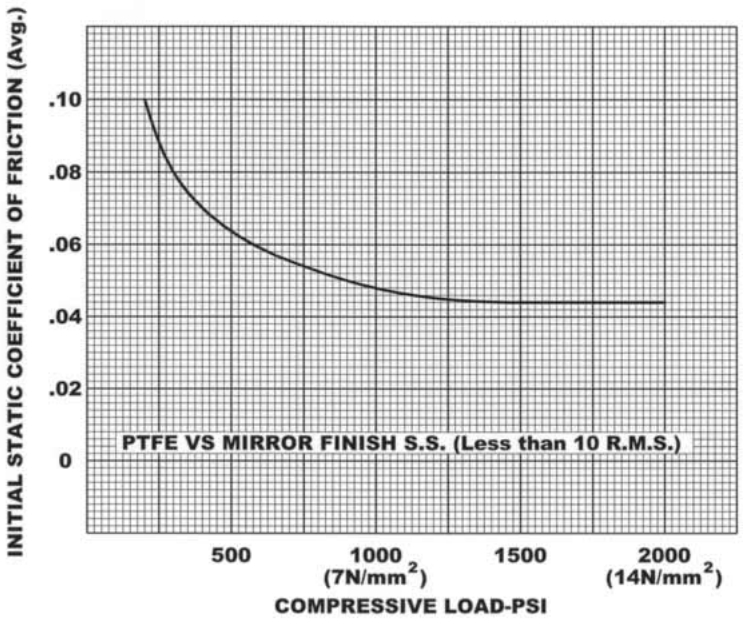

Note: Friction reduces as the compressive stress is increased.

Average 50-Year Test Life

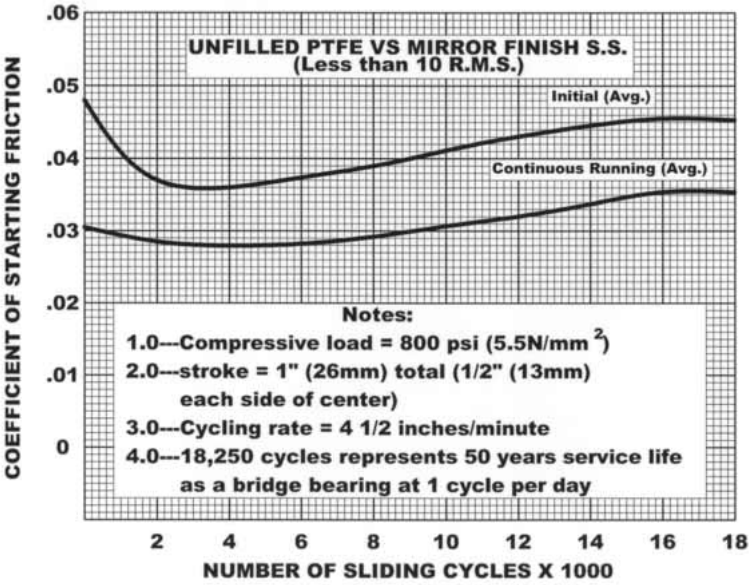

Note: Initial starting friction reduces to a run-in value under continuous sliding conditions.

Fabreeka® Structural Expansion Bearing Information

The following questions need to be addressed for proper expansion bearing design.

1. The maximum available bearing length, width and height.
2. The maximum expansion expected and in which direction (length or width).
3. The maximum static and dynamic (live) load on each bearing.
4. The maximum beam rotation in radians at the bearing area.

Expansion Bearings (STX)

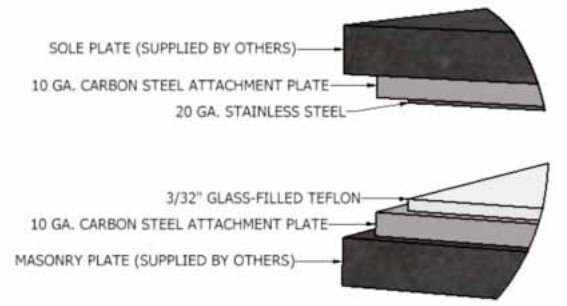

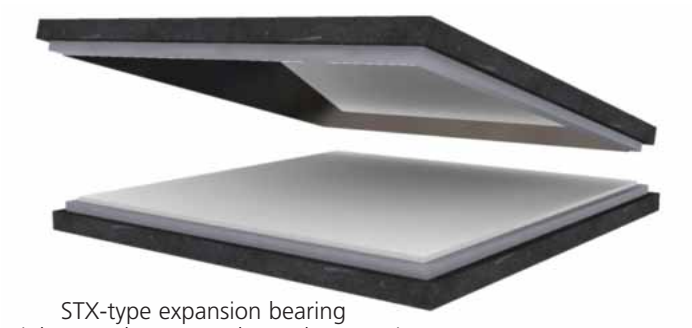

STX-type expansion bearing
Stainless steel upper and PTFE lower units

Guidelines for Applications

STX Expansion Bearings are used when construction tolerances, loads and rotation are moderate. This bearing has an extremely low coefficient of friction, which is exceptional for use where expansion is large.

Please note: Fabreeka® can supply various types of Teflon, based on customer requirements.

Typical applications include:

- **Pedestrian Bridges**
- **Parking Garages**
- **Small Buildings**
- **Tanks**
- **Vessels**
- **Pipelines**
- **Slip Joints**
- **Expansion Joints**

Expansion Bearings (TTX)

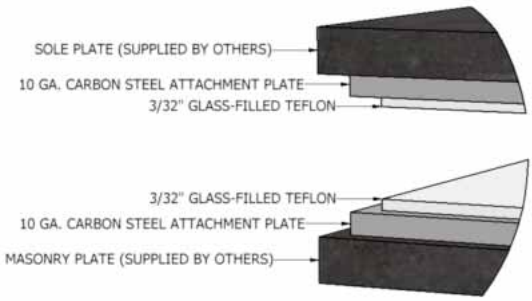

TTX-type expansion bearing
PTFE upper and lower units

Guidelines for Applications

TTX Expansion Bearings are used when construction tolerances, loads and rotation are moderate. This bearing has a higher coefficient of friction than the STX Bearing and is used where expansion criterion is limited.

Typical applications include:

- **Tanks**
- **Vessels**
- **Slip Joints**
- **Expansion Joints**

Note: Please use the *Guidelines for Applications* to choose the proper bearing element based on your application criteria.

Expansion Bearings (GGX)

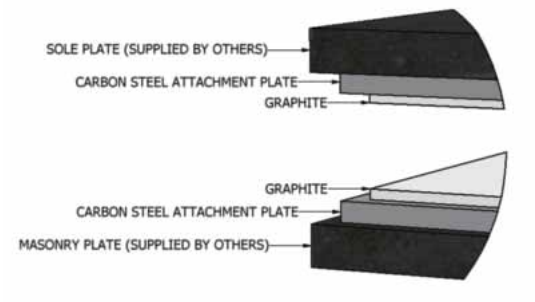

GGX-type expansion bearing
Graphite upper and lower units

Guidelines for Applications

GGX Expansion Bearings are used when temperature is a factor - in excess of 275°F. Graphite is a versatile engineered material with an unusual combination of physical, electrical and chemical properties. These bearings are ideal for hostile environments where other types of materials may break down due to acids, solvents and high temperature. The GGX Expansion Bearings achieve effective performance in environments where temperatures range from -50°F to 700°F.

Typical applications include:

- **Steam Pipelines**
- **High Temp. Vessels**
- **Chemical Tanks**

Holes & Slots

Holes and slots can be provided through steel and sliding surface (shown above left) or the steel plate only (shown above right) allowing mechanical attachment of expansion units to steel structures or anchoring to concrete structures.

At left, stainless sliding surface being spot-welded to carbon steel attachment plate.

General Notes:

Care must be exercised and appropriate weld procedure used when welding the Lower Unit in place to insure that the epoxy bond area does not reach a temperature of (or exceeding) 300°F. It is therefore recommended that the smallest diameter welding rod be used to minimize heat build-up. *For example:* use a 1/8" diameter rod to run a 3/8" fillet weld.

For **MULTIDIRECTIONAL** expansion requirements, simply replace the slotted hole with an enlarged circular hole.
For **MULTIROTATIONAL** situations, the Fabreeka®-PTFE (Lower Unit) can be supplied in circular rather than rectangular shape. The circular (disc) shape assures a constant rotational length.

Expansion Bearings / Pipelines

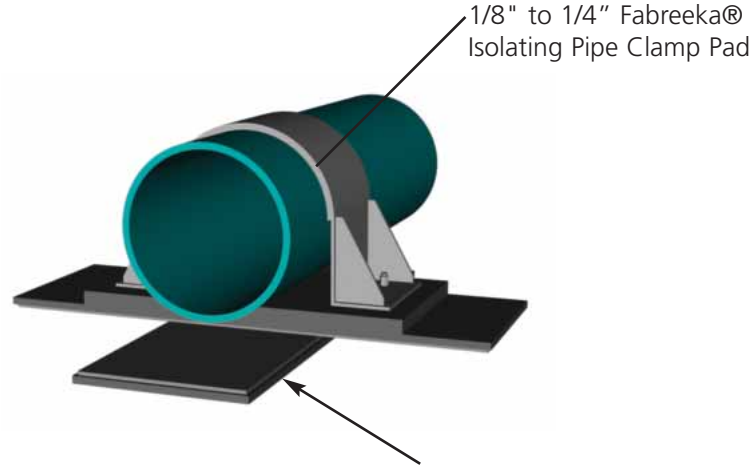

Expansion Bearing - Type dependent on application criteria. Please see Bearing Configurations.

Fabreeka® Pipe Slides/Expansion Bearings facilitate the movement due to expansion and contraction from thermal and/or dynamic changes. The bearing element helps to distribute loadings and reduces localized stress concentrations.

Typical applications include:

- **Piping**
- **Transmission Lines**
- **Conduit**
- **General Plumbing**

Piping and Bottle Restraints Application

Problem:

A major problem facing companies with gas transmission and petrochemical piping fatigue failures caused by vibration. High frequency (ultrasonic and hypersonic) gas pulsations at natural gas transmission line compressor stations cause metal fatigue in piping and valves. Problems also arise from "water-hammer" type shock impulses that occur. Excessive vibration constitutes a great threat to the safety and reliability of gas compression and liquid pump systems. Some of the problems caused by excessive vibration are:

- rupture of connecting or process piping
- stud bolt and branch piping breakage
- header and manifold breakage
- unwanted noise

Solution:

To eliminate excessive vibration and design safe and reliable piping system, a properly designed mechanical restraint is required. The application of Fabreeka® Preformed Fabric Pad within these mechanical restraints can provide:

- increased damping of piping vibrations
- increased thermal flexibility
- reduction of unwanted noise

The application of Fabreeka® Preformed Fabric Pad in the pipe clamp also prevents:

- corrosion caused by metal-to-metal contact
- high stress points
- fretting
- galvanic action
- non-uniform clamp contact pressure

Fabreeka® Preformed Fabric Pad is available in a range of thicknesses to accommodate any design application and is available with a PTFE Teflon surface for increased thermal growth and insulating characteristics for high temperatures.

Fabricated pipe clamps for petro-chemical pipe application.

Piping and Bottle Restraints

Fabreeka® Bearing Pads

HI-LOAD FABRIC ELASTOMERIC BEARING PAD (HL-FEB)

In moderate heat applications (under 200°F) and / or high pulsation resonance applications, the Fabreeka® bearing pad will provide an ideal solution as it is an isolation pad between the piping and restraint, and it will offer gasketing to prevent metal to metal contact, and act as an effective vibration damper. The low spring rate of the Fabreeka® pad will give you damping and dynamic structural stability in your restraint system.

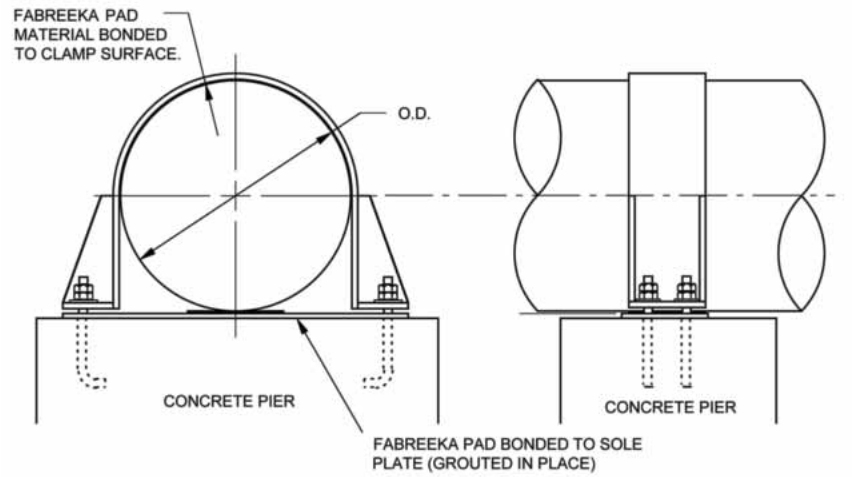

Fabreeka®-PTFE Bearing Pads

HI-LOAD FABRIC ELASTOMERIC TEFLON SLIDE BRG PAD (HL-FEB-TS)

In high heat applications (under 400°F) and /or applications where it is necessary for the piping system to grow, the Fabreeka®-PTFE bearing pad will provide you with all of the qualities of Fabreeka® bearing pad and give you a layer of Teflon® substrate to act as an insulator from the temperature of the piping when the Teflon® surface is placed on the pipe side of the restraint. In thermal applications when you want movement laterally and need the damping of high pulsation energy, the Fabreeka®-PTFE allows the movement while providing damping when the Teflon® surface is placed on the pipe side of the restraint.

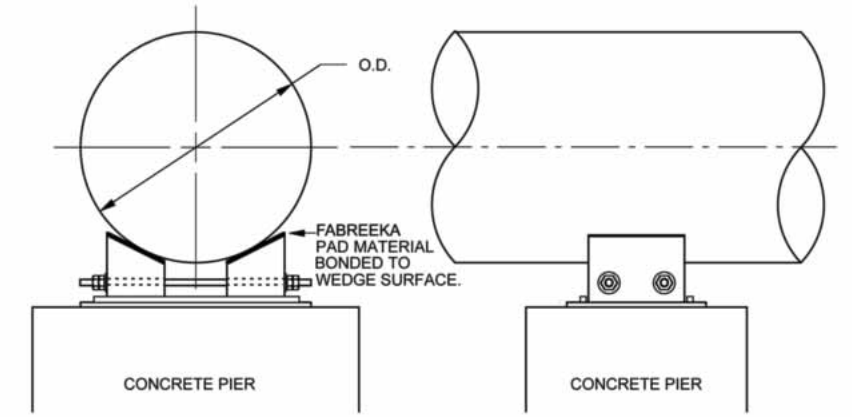

Fabreeka® SA-47 Bearing Pads

STANDARD RANDOM-FABRIC ELASTOMERIC BEARING PAD (R-FEB)

In cold piping applications where you have a minimum amount of resonance and no requirement for piping to move or grow, Fabreeka® SA-47 is an ideal solution as it is an isolation pad between the piping and restraint, and it will offer gasketing to prevent metal to metal contact.

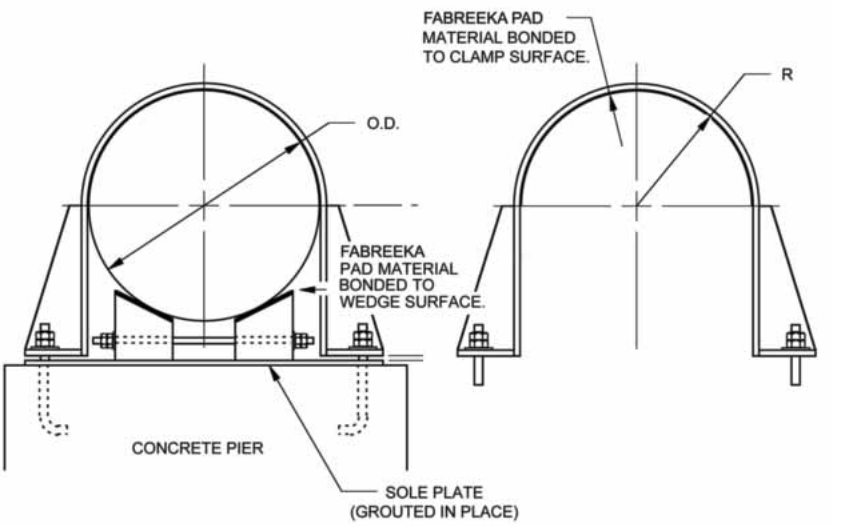

Fabreeka® #700 Epoxy Adhesive

BEARING ADHESIVE

Fabreeka® bonding adhesive recommended for pad to clamp interiors and base plates.

FABREEKA®
VIBRATION & SHOCK CONTROL

*Fabreeka is a registered trademark of Fabreeka International, Inc.

World Headquarters
Fabreeka International, Inc.
PO Box 210
1023 Turnpike Street
Stoughton, MA 02072
Tel: (800) 322-7352
Tel: (781) 341-3655
Fax: (781) 341-3983
E-mail: info@fabreeka.com
www.fabreeka.com

Germany
Fabreeka GmbH Deutschland
Hessenring 13
D-64572 Büttelborn
Tel: 49 - (0)6152-9597-0
Fax: 49 - (0)6152-9597-40
E-mail: info@fabreeka.de
www.fabreeka.de

England
ACE Fabreeka UK
Unit 404 Easter Park
Haydock Lane
Haydock WA11 9TH
Tel: 44 - (0)1942 727440
Fax: 44 - (0)1942 717273
E-mail: info@ace-fabreeka.com
www.fabreeka.co.uk

Taiwan
Fabreeka International, Inc.
PO Box 1246
Tainan 70499
Taiwan
Tel: 886-935 273732
E-mail: info@fabreeka.tw
www.fabreeka.com.cn

FAB 1000-302 07/14:03/16 © 2016 Fabreeka International, Inc.