Engineered Materials for
Building and Construction

FABREEKA®
VIBRATION & SHOCK CONTROL

Engineered Materials for Building & Construction

Fabreeka® International has a proud history in structural engineering. The company has been providing designers and contractors with the highest quality engineered materials for over 50 years.

Fabreeka's® engineered materials and systems meet exacting customer requirements in numerous commercial, industrial and military applications including bridges, parking garages, airplane hangars and power plants.

Following are a few examples of the many applications for Fabreeka's® products in Structural Engineering.

Engineered Applications

Fabreeka's® experience has been called upon many times by Consulting Engineers to assist them in finding solutions to the problems created by motion, shock, vibration and structure-borne noise.

From specially designed damping rings to control excessive motion on steel exhaust stacks to emergency stops on missile silos to prevent damage in case of hydraulic failures, Fabreeka's® engineering department works closely with customers to assist them in finding the solutions to difficult design problems.

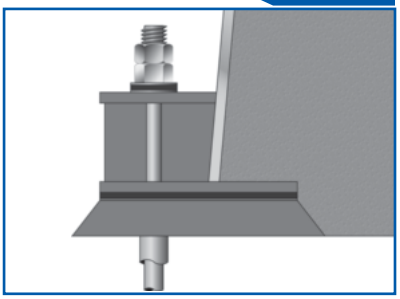

Bearing Pads

Fabreeka® has a number of products which are suitable for use as bearing pads. These products eliminate concrete spalling because they make up for structural irregularities, rotation and nonparallel surfaces as well as preventing electrolytic action between dissimilar materials.

Fabreeka® resilient, preformed fabric pads, the orignal MIL-C-882 material, are used in high load carrying applications, where performance and reliability are critical.

SA-47 preformed, fabric reinforced pads are used on a myriad of concrete connections because they provide an economical alternative to Fabreeka® pads, while exhibiting higher load carrying capacity than unreinforced elastomeric pads.

Vibration Isolation

Fabreeka's® resilient, preformed fabric pads, washers, bushings and custom-made parts have been used extensively to reduce structure borne noise and vibration in numerous applications.

Fabreeka® systems including INFAB™ or Fabcel® elastomeric materials provide the ultimate in building base insolation.

Whether for an inertia block to prevent transmission of vibration to or from equipment, a room to protect sensitive medical or computer equipment, or even base isolation for an entire building to help eliminate disturbing influences from the outside, Fabreeka® has the expertise to provide an engineered solution to your vibration problems.

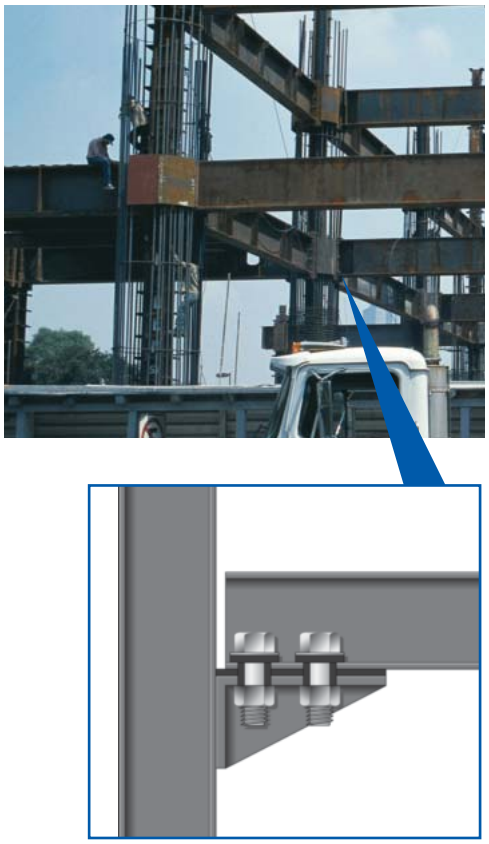

Slide and Expansion Bearings

Fabreeka's® SBX Structural Expansion Bearings are the original slide bearings, setting the standard for engineering excellence since they were introduced in 1960.

Fabreeka's® SBX Bearings consist of an upper and lower unit. The upper unit includes a mirror finish stainless steel facing which is structurally bonded to an attachment plate.

The lower unit is comprised of a Fabreeka® resilient, preformed pad surfaced with PTFE. A rigid confining substrate integrally bonds the PTFE to the pad, which is then structurally bonded to an attachment plate.

When the upper and lower units are mated, the stainless steel slides on the PTFE surface with an extremely low co-efficient of friction.

SBX bearings are individually designed to meet the cost and performance requirements of each project.

Fabreeka® also manufactures a complete line of custom expansion bearings for a variety of industries, including bearings for high temperature applications.

Fabreeka® Drain Trough System

The Fabreeka® Drain Trough system is a flexible water drainage system for use on roadway bridges and overpasses. Designed for installation under the expansion joint fingers, these flexible troughs channel water into rigid down spouts and avoid water dripping on vehicles passing under the bridge.

The Fabreeka® Drain Trough system will not rust. It is specially suited to applications where drainage contains road salt. Fabreeka's® Drain Trough system has been in use since 1966 and is approved for use in most states. It is available in two thickness gauges for regular and heavy use, and can be custom sized for any bridge width. There are many applicable anchoring techniques. Please consult the Fabreeka® Engineering Department for design advice regarding affixing schemes and configuration considerations.

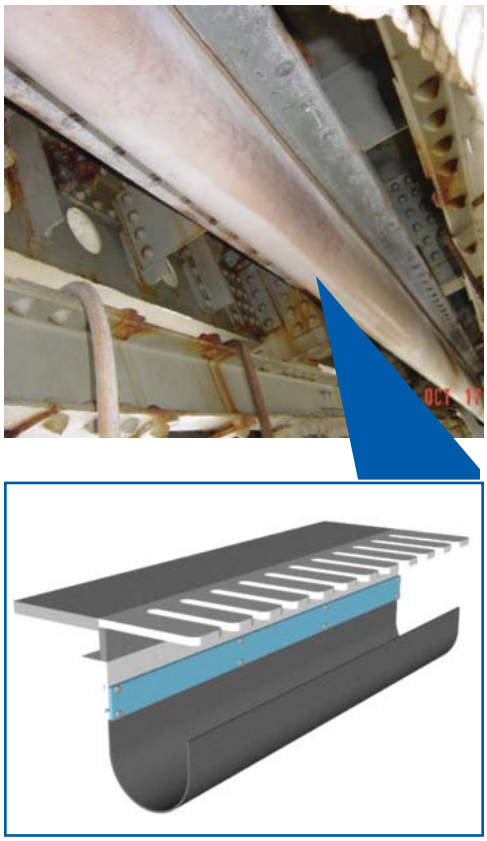

Fabreeka® Drain Trough System Specifications

Material shall be composed of multiple plies of polyester/nylon fabric laminated with elastomer, vulcanized to form a composite laminate. Physical properties of the composite laminate shall meet the following requirements:

Number of Laminates	**2 ply** (1/8")	**3 ply** (3/16")
Weight of Laminate (minimum) lbs/sq ft	0.75	0.85
Thickness (inches)	0.135 ±0.020	0.165 ±0.031
Tensile Strength (minimum) lbs/in of width	850	1,300
Elongation at Tensile Strength (maximum) percent	30%	30%

Bridge / Guard Rail Pads

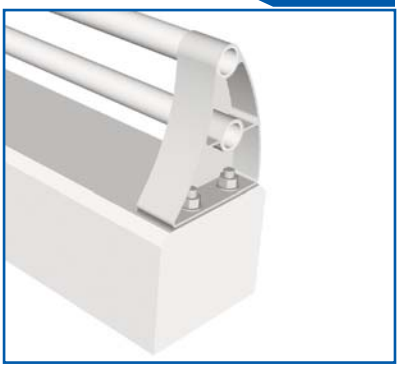

Fabreeka® Guard Rail pads are used to make the installation of railings simpler and more efficient. A pad is supplied to the size of the contact area of the rail support. The pad evenly distributes the loading and hold down force from the bolts by conforming to the irregularities of the concrete surface.

During installation, the pad is set down over the protruding threaded mounting studs. The guard rail support is positioned and the rails placed. The anchor nuts can then be torqued in place and the pad will allow the support to conform to the concrete support structure. The guard rail support is held securely and reduces deformation to the support or damage to the concrete.

The pads are constructed from SA-47 which is a high quality elastomer containing a random distribution of synthetic fibers, vulcanized and cured into a slab form. High compressive strength and limited creep characteristics distinguish this material from typical unreinforced elastomeric pads. The durability of Fabreeka Bridge Rail pads makes them an excellent alternative to epoxy and grout installation methods.

Lamp Post Pads

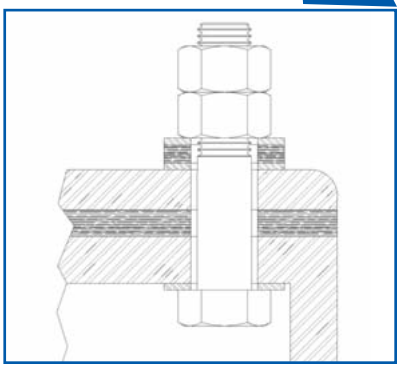

Fabreeka® Lamp Post pads are an excellent and economical way to dampen out shock and vibration induced by wind and traffic. A flat pad is constructed from our exclusive SA-47 or Fabreeka® pad material to the exact size, shape and bolt pattern of the lamp post or highway sign base. Additionally, Fabreeka® washers and bushings are utilized to completely isolate the lamp post from transmitted vibration. Reduction in vibration means longer bulb life and less maintenance. The pads also help to evenly distribute loadings and adapt to any irregularities in the concrete mounting surfaces.

Fabreeka® Products
for Building and Construction

Fabreeka® Preformed Fabric Pads
The Original MIL-C-882 Material

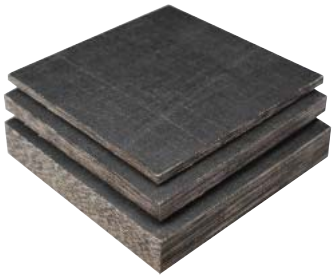

Fabcel® Pads

SA-47 Pads

Typical Applications

Slide Bearings
Stack Damping Rings
Bearing Pads
Base Isolation
Thermal Break/Thermal Insulation
Weather Stripping
Emergency Door Stops
Light Pole Vibration Dampers
Heat and Air Conditioning Duct Isolation
Transformer Mounts
Air Conditioner Chiller Mounts
Computer Room Isolation
Rail Pads for Elevators
Roof Cranes
Pumps / Motors
Fan Isolation

SBX
Structural Expansion Bearings

Fabreeka-TIM®
Thermal Insulation Material/Thermal Break

Fabreeka®
Custom Fabricated Parts

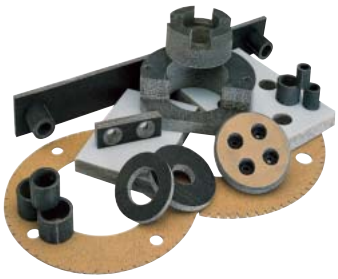

World Headquarters
Fabreeka International, Inc.
PO Box 210
1023 Turnpike Street
Stoughton, MA 02072
Tel: (800) 322-7352
Tel: (781) 341-3655
Fax: (781) 341-3983
E-mail: info@fabreeka.com
www.fabreeka.com

Germany
Fabreeka GmbH Deutschland
Hessenring 13
D-64572 Büttelborn
Tel: 49 - (0)6152-9597-0
Fax: 49 - (0)6152-9597-40
E-mail: info@fabreeka.de
www.fabreeka.de

England
ACE Fabreeka UK
Unit 404 Easter Park
Haydock Lane
Haydock WA11 9TH
Tel: 44 - (0)1942 727440
Fax: 44 - (0)1942 717273
E-mail: info@ace-fabreeka.com
www.fabreeka.co.uk

Taiwan
Fabreeka International, Inc.
PO Box 1246
Tainan 70499
Taiwan
Tel: 886-935 273732
E-mail: info@fabreeka.tw
www.fabreeka.com.cn

©2016 Fabreeka International, Inc.
FAB 1000-301 12/04:12/16